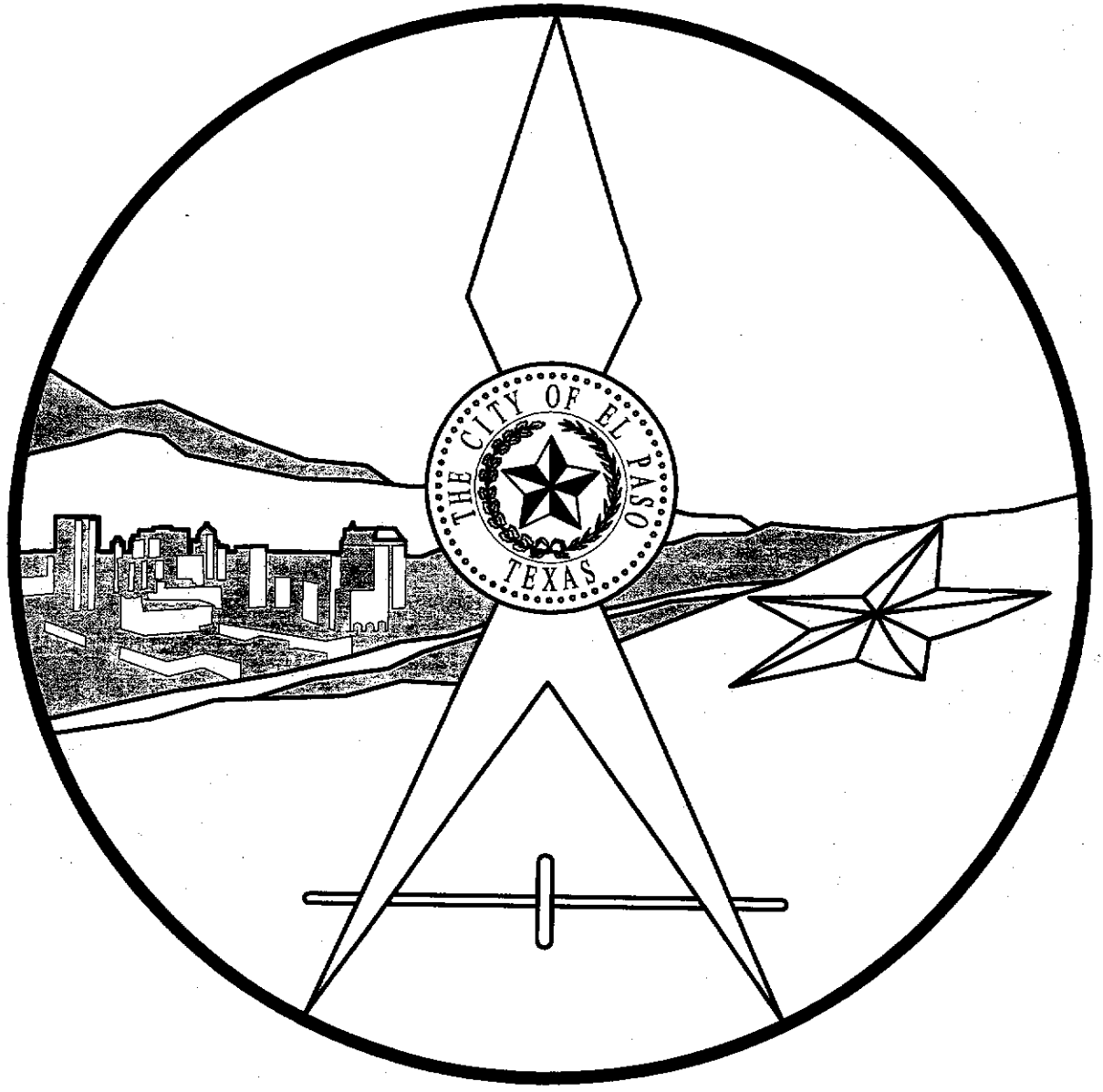

TITLE 19 - SUBDIVISION ORDINANCE

DESIGN STANDARDS FOR CONSTRUCTION

JUNE 3, 2008

DESIGN STANDARDS FOR CONSTRUCTION

SECTION 1	SUBDIVISION IMPROVEMENT PLAN PREPARATION GUIDELINES
SECTION 2	DRAINAGE AND DRAINAGE STRUCTURES
SECTION 3	STREETS
SECTION 4	FENCING
SECTION 5	EARTH RETENTION AND EROSION CONTROL
SECTION 6	SIDEWALKS, DRIVEWAYS AND CURB RAMPS
SECTION 7	SIGNAGE AND SIGNALIZATION
SECTION 8	STREET LIGHTING
SECTION 9	TYPICAL LOT LAYOUT
SECTION 10	TRAFFIC CALMING STANDARDS
APPENDIX	APPLICATION FORMS AND CHECKLISTS

SECTION 1

SECTION 1

SUBDIVISION IMPROVEMENT PLAN PREPARATION GUIDELINES

TITLE	PAGE
PLAN STANDARDS	1-1
TITLE SHEET	1-2
GRADING PLAN	1-3A thru 1-3B
DRAINAGE PLAN	1-4A thru 1-4E
DRAINAGE COMPUTATION TABLES	1-5
STREET PLAN & PROFILE	1-6A thru 1-6B
STORM SEWER PLAN & PROFILE	1-7A thru 1-7D
DETAIL SHEET	1-8
CONSTRUCTION PHASING PLAN	1-9

PLAN STANDARDS

A. LETTERS AND NUMBERS SHALL BE VERTICAL OR SLANTED CAPITAL. THE MINIMUM SIZE SHALL BE 1/16-INCH - GUIDELINES ARE REQUIRED FOR FREEHAND.

B. REFERENCE CROSS-SECTION SYMBOLS SHALL BE AS SHOWN

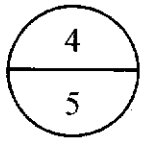

1. TOP NUMBER: SECTIONAL DETAIL NUMBER
2. BOTTOM NUMBER: SHEET DETAIL NUMBER

TITLE SHEET

A. LOCATION PLANS - SCALE ONE (1) INCH = SIX HUNDRED (600) FEET

B. TITLE SHALL COMPLY WITH THE CITY'S ENGINEERING DEPARTMENT'S STANDARD TITLE SHEET

C. VICINITY MAP - N. T. S.

D. INDEX OF DRAWINGS

1. TITLE SHEET
2. FINAL APPROVED PLAT FOR REFERENCE ONLY (IF APPLICABLE)
3. GRADING PLAN
4. DRAINAGE PLAN
5. STREET PLAN & PROFILES
6. CROSS-SECTIONS
7. DETAILS
8. ILLUMINATION PLAN; INCLUDING STREET SIGNAGE & NDCBU LOCATIONS
9. LANDSCAPE & IRRIGATION PLAN
10. STORMWATER POLLUTION PREVENTION PLANS AND ASSOCIATED SPECIFICATIONS

E. DESIGN FIRM NAME

GRADING PLAN

A. NORTH ARROW UP OR LEFT TO RIGHT, A SCALE OF ONE (1) INCH = ONE HUNDRED (100) FEET

B. GRADING PLAN SHALL BE REFERENCED TO THE PRELIMINARY PLAT VERTICAL CONTROL. VERTICAL CONTROL TO NORTH AMERICAN VERTICAL DATUM (NAVD) 1988.

C. BOUNDARIES OF SUBDIVISION OR SITE

D. CONTOUR LINES OF THE PROPOSED SUBDIVISION, AND TWO HUNDRED (200) FEET OUTSIDE AND ABUTTING THE SUBDIVISION UNLESS THE AREA IS MODIFIED BY THE CITY ENGINEER, HAVING THE FOLLOWING INTERVALS:

1. ONE FOOT (1') CONTOUR INTERVALS FOR GROUND SLOPES BETWEEN LEVEL AND THREE (3) PERCENT;

2. TWO FOOT (2') CONTOUR INTERVALS FOR GROUND SLOPES MORE THAN THREE (3) PERCENT AND UP TO AND INCLUSIVE OF ELEVEN (11) PERCENT;

3. FIVE FOOT (5') COUNTOUR INTERVALS FOR GROUND SLOPES OVER ELEVEN (11) PERCENT;

4. DASHED LINES FOR EXISTING CONTOUR LINES;

5. SOLID (BOLD) LINES FOR PROPOSED CONTOUR LINES; AND

6. INDEX CONTOURS AT FIVE (5) FEET INTERVALS.

E. LOCATE ALL EXISTING STRUCTURES WITHIN AND ONE HUNDRED (100) FEET OUTSIDE OF THE SUBDIVISION UNLESS OTHERWISE APPROVED BY THE CITY ENGINEER.

F. TYPICAL GRADING PLAN FOR LOT SHALL SHOW DIRECTION OF RUNOFF OR ON-SITE PONDING.

G. FINISHED FLOOR AND FINISHED GROUND ELEVATION FOR ALL LOTS.

H. TOP OF CURB, HEADER CURB AND DRIVEWAY ELEVATIONS.

I. SLOPE STABILIZATION PLAN, WHERE REQUIRED BY CITY ENGINEER.

J. EROSION CONTROL PLAN

K. CONCENTRATED STORM RUNOFF OVER UNPROTECTED AREAS, INCLUDING SLOPES SHALL NOT BE PERMITTED

L. CROSS SECTIONS AS REQUESTED BY CITY ENGINEER

M. REQUIRED RETAINING WALLS (LOCATION ONLY, UNLESS TO BE BUILT BY SUBDIVIDER)

DESIGN OF RETAINING WALLS FOUR (4) FEET OR HIGHER SHALL BE SIGNED AND SEALED BY A PROFESSIONAL ENGINEER

N. PLANS SHALL SHOW FLOOD ZONE AREAS AS PER CURRENT FLOOD INSURANCE RATE MAPS (FIRM) OR LETTER OF MAP REVISION (IF APPLICABLE), REFERENCE PANEL NUMBER AND DATE

O. FINISHED FLOOR ELEVATIONS SHALL COMPLY WITH DRIVEWAY ORDINANCE AND/OR FEMA REGULATIONS.

DRAINAGE PLAN

(REFER TO DRAINAGE DESIGN MANUAL FOR DRAINAGE CRITERIA, DESIGN METHODS AND METHODOLOGIES)

A. SCALE ONE (1) INCH = ONE HUNDRED (100) FEET - NORTH ARROW

B. DRAINAGE PLANS SHALL CONFORM TO THE APPROVED MASTER DRAINAGE PLAN, IF APPLICABLE

C. SHOW BOUNDARIES OF SUBDIVISION AND CONTRIBUTING DRAINAGE AREAS

D. IDENTIFY LIMITS OF CONTRIBUTING WATERSHED AREAS WITHIN SUBDIVISION AND OUTSIDE THE SUBDIVISION

E. CALCULATION TABLE TO INCLUDE TIMES OF CONCENTRATION (Tc), INTENSITIES (I), COEFFICIENT VALUES (C) AND EXPECTED RUNOFFS OF ALL WATERSHED AREAS - EXPECTED RUNOFF QUANTITIES, CARRYING CAPACITIES, AND RUNOFF VELOCITIES FOR DRAINAGE STRUCTURES SHALL BE SHOWN ON PLANS FOR 25, 50 AND 100 YEAR EVENTS.

F. SHOW LOCATION AND SIZES OF ALL PROPOSED AND EXISTING DROP INLETS, PIPES, CULVERTS, CHANNELS, BASINS, AND OTHER DRAINAGE STRUCTURES

G. SHOW EXISTING AND PROPOSED DRAINAGE FLOW PATTERNS

H. SHOW HIGH AND LOW POINTS OF STREET WITH FLOW PATTERNS

DRAINAGE PLAN
(continued)

I. STORAGE FACILITIES (DAMS, PONDS, ETC.) INDICATING:

1. MAXIMUM CAPACITY
2. EXPECTED RUNOFF
3. BOTTOM ELEVATION
4. HIGH WATER SURFACE
5. FREE BOARD
6. SPILLWAY AND OUTLET STRUCTURE
   - (A) MAXIMUM CAPACITY
   - (B) DESIGN OUTFLOWS
7. SEDIMENT AND EMERGENCY VOLUMES
8. APPROVAL FROM TEXAS WATER BOARD AND U.S. ARMY CORPS OF ENGINEERS FOR DAMS, WHEN APPLICABLE
9. SOIL TESTS TO DETERMINE SPECIAL STABILIZED SLOPES
10. PERCOLATION RATE TESTS TO BE PERFORMED AT PROPOSED POND INVERT (RETENTION BASINS ONLY). TO BE PERFORMED WHEN THE WATER TABLE (ELEVATION) IS AT IT'S HIGHEST.
11. EXISTING WATER TABLE ELEVATION DURING OFF-PEAK PERIOD AND HIGH WATER TABLE ELEVATION, IF APPLICABLE.

DRAINAGE PLAN
(continued)

J. ON LOTS WITH ON-SITE PONDING THE FOLLOWING INFORMATION SHALL BE SUBMITTED

1. PRELIMINARY SOILS TEST. FINAL PERCOLATION RATE TEST, SOILS TESTS, AND WATER TABLE ELEVATION INFORMATION TO BE SUBMITTED PRIOR TO STREET ACCEPTANCE AND/OR BUILDING PERMITS. PERCOLATION TESTS TO BE PERFORMED AT THE INVERT WHERE STORMWATER WILL BE RETAINED AND WHEN THE WATER TABLE IS AT ITS HIGHEST.

2. TYPICAL LOT CROSS SECTION DETAIL SHOWING ON-SITE PONDING STORAGE CAPACITY

3. PERMANENT ELEVATION MARKER DETAIL (REFER TO PLATE 2-7)

4. DRAINAGE COMPUTATIONS BASED ON 100-YEAR STORM

5. MINIMUM OF 2.0% CROSS SLOPE ON STREET

6. LOTS AND/OR MEDIANS SHALL ALSO ACCOMMODATE ALL STREET RUNOFF

7. FIFTY (50) PERCENT OF THE RESIDENTIAL LOT AREA SHALL REMAIN WITHOUT STRUCTURES OR OTHER IMPERMEABLE SURFACES

8. ADDITIONAL EMERGENCY AND SILT/DEBRIS CAPACITY NOT REQUIRED FOR RESIDENTIAL ON-SITE PONDING LOTS

K. STREET DESIGN REQUIREMENTS

1. GENERAL STANDARDS

(A) MAXIMUM STANDARD CURB HEIGHT - 6 INCHES UNLESS OTHERWISE APPROVED BY THE CITY ENGINEER

(B) CROWN ON STREET TO BE FROM ZERO (0) TO THREE (3) PERCENT SLOPE

DRAINAGE PLAN
(continued)

(C) INVERT STREET CROSS SECTION ALLOWED WITH APPROVAL BY CITY ENGINEER

(D) NO PONDING (UNDRAINED LOW POINTS) TO BE ALLOWED ON STREETS TO PREVENT PAVEMENT DETERIORATION

2. STANDARDS FOR 25-YEAR STORM

(A) MAXIMUM FLOW DEPTH IN ANY STREET: FIVE (5) INCHES OR CURB HEIGHT, WHICHEVER IS LESS

(B) MINOR ARTERIALS; ONE HALF (1/2) OF ONE (1) LANE WIDTH TO REMAIN FREE OF WATER IN EACH DIRECTION

(C) MAJOR ARTERIALS AND SUPER ARTERIALS; ONE (1) FULL LANE WIDTH ON EACH SIDE OF RAISED MEDIAN TO REMAIN FREE OF WATER

(D) AT ROAD BENDS AND INTERSECTIONS, MAXIMUM FLOW DEPTH IN STREETS TO BE FIVE (5) INCHES

(E) PRODUCT NUMBER (DEPTH X AVERAGE VELOCITY) TO BE A MAXIMUM OF 6.5 FT^2/S UNLESS APPROVED BY THE CITY ENGINEER

(F) ANY HYDRAULIC JUMPS (EG. SAG VERTICAL CURVES OR CHANGES IN SLOPE) TO BE CONTAINED WITHIN CURB HEIGHTS WITH APPROPRIATE FREE BOARD

DRAINAGE PLAN
(continued)

(G) THE HYDRAULIC GRADE LINE FOR THE DRAINAGE STRUCTURE(S) DISCHARGING INTO A 100-YEAR RETENTION OR DETENTION BASIN SHALL BE BASED ON THE 100-YEAR WATER SURFACE ELEVATION (WSEL) WHICH EXCLUDES THE SILT/DEBRIS AND 25% EMERGENCY CAPACITY VOLUMES AND:

(i.) THE 25-YEAR WSEL SHALL NOT EXCEED THE TOP OF CURB ELEVATION

(ii.) IF THE 100-YEAR WSEL EXCEEDS THE TOP OF CURB ELEVATION, THE ENGINEER SHALL ALSO CONSIDER THE EFFECT ON MANHOLES.

3. STANDARDS FOR 100-YEAR STORM

(A) PRODUCT NUMBER (DEPTH X AVERAGE VELOCITY) TO BE A MAXIMUM OF 8 FT^2/S UNLESS APPROVED BY THE CITY ENGINEER

DRAINAGE COMPUTATION TABLES

DETENTION OR RETENTION BASINS							
BASIN NO.	REQUIRED CAPACITY (AC.FT)	AVAILABLE CAPACITY (AC.FT)	PEAK INFLOW (CFS)	OUTLET TOWER FLOW (CFS)	HIGH WATER SURFACE ELEVATION (FT)	BOTTOM ELEVATION	FREE BOARD (FT)

WATERSHED AREAS					
DRAINAGE AREA NO.	DRAINAGE AREA (AC)	DESIGN STORM INTENSITY	TIME OF CONCENTRATION	RUNOFF COEFF. (C)	Q (CFS)

DROP INLETS			
DROP INLET NO	REQ. FLOW CAPACITY Q REQ (CFS)	AVAIL. FLOW CAPACITY Q AVAIL.(CFS)	FLOW BYPASS

STREET PLAN AND PROFILE

A. PLAN

1. STREET NAMES
2. VERTICAL CONTROL TO NORTH AMERICAN VERTICAL DATUM (NAVD) 1988 AND SHOWN ON EVERY SHEET
3. SCALE ONE (1) INCH = THIRTY (30) FEET MAXIMUM HORIZONTAL VERTICAL SCALE OF ONE (1) INCH = FIVE 95) FEET FOR SLOPES OF ZERO (0) PERCENT TO THREE (3) PERCENT AND ONE (1) INCH = TEN (10) FEET FOR SLOPES GREATER THAN THREE (3) PERCENT
4. EXISTING STRUCTURES AND TOPOGRAPHIC FEATURES
5. SURVEY CONTROL LINE
6. RIGHT-OF-WAY LINES, CURB LINES AND CENTERLINES
7. RIGHT-OF-WAY AND ROADWAY WIDTHS
8. CURB RETURN DATA
9. CENTERLINES AND CURB DATA
10. STATIONING ALONG CENTERLINE
11. STATION AT SPECIAL POINTS (PC, PT, PRC, CB, RET, CL INTERSECTIONS, LC, ETC.)
12. TOP OF CURB ELEVATION AT SPECIAL POINTS (PC, PT, PRC, CB, RET)
13. PROPOSED AND EXISTING DRAINAGE STRUCTURES
14. DIRECTION OF FLOW AND HIGH AND LOW POINTS
15. FIFTY (50) FOOT (MINIMUM) TRANSITIONS FROM CROWN - FLAT - INVERT
16. LIMITS OF CONSTRUCTION
17. LOCATION OF GUARDRAIL AND DEAD END SIGNS
18. MATCH STATIONS FOR FOLLOWING PAGE
19. SHOW ALL EXISTING STRUCTURES AND IMPROVEMENTS ONE HUNDRED (100) FEET PAST THE LIMITS OF CONSTRUCTION UNLESS OTHERWISE APPROVED BY THE CITY ENGINEER
20. SIDEWALK LOCATIONS

STREET PLAN AND PROFILE
(continued)

B. PROFILE

1. EXISTING AND PROPOSED PROFILES AT CURB LINES

2. PROPOSED PERCENT GRADE FOR ALL PROFILES

3. MINIMUM OF FIVE TENTHS (0.5) PERCENT GRADE AND A MAXIMUM OF ELEVEN (11) PERCENT GRADE; EXCEPT THAT UP TO FIFTEEN (15) PERCENT GRADE IN THE MOUNTAIN DEVELOPMENT AREA MAY BE PERMITTED WITH APPROVAL OF FIRE DEPARTMENT AND CITY ENGINEER

4. VERTICAL CURVE INFORMATION. THE ENTIRE LENGTH OF VERTICAL CURVE SHALL BE SHOWN ON SAME SHEET

5. EXISTING AND PROPOSED ELEVATIONS AT EVERY FIFTY (50) FEET AND SPECIAL STATIONS

6. STREET PROFILE SHALL EXTEND ONE HUNDRED (100) FEET BEYOND LIMITS OF CONSTRUCTION UNLESS OTHERWISE APPROVED BY THE CITY ENGINEER

7. EXISTING AND PROPOSED DRAINAGE STRUCTURES AS THEY RELATE TO PROFILES

8. PROPOSED STREET PROFILE SHALL MATCH EXISTING STREET PROFILE FOR A SMOOTH TRANSITION

9. OPPOSITE CURB ELEVATIONS SHALL MATCH AT EACH STATION, EXCEPT IN A SUPERELEVATED ROADWAY OR AS APPROVED BY CITY ENGINEER

10. STREET CROWN SHALL NOT EXCEED THREE (3) PERCENT

STORM SEWER PLAN AND PROFILE

A. STORM SEWER PLAN

1. PROPOSED RIGHT-OF-WAY LINE AND WIDTHS
2. LIMITS OF CONSTRUCTION AND MATCH-LINE STATIONING
3. NORTH ARROW AND SCALE
4. NAME OF STREET
5. SURVEY CONTROL LINE
6. STORM SEWER ALIGNMENT TIED TO SURVEY CONTROL LINE
7. BEARINGS (DIRECTION AND HORIZONTAL CURVE DATA)
8. STATIONING
9. SIZE, TYPE, AND CLASSIFICATION OF PIPE
10. MANHOLES - JUNCTION BOXES (CAST-IN-PLACE OR PRE-CAST)

    (A) STATIONING AND A MAXIMUM OF FIVE HUNDRED (500) FEET ON CENTER - MANHOLE REQUIRED AT CHANGE OF DIRECTION

    (B) TOP OF COVER ELEVATION

    (C) INVERT ELEVATION

    (D) TYPE, SIZE, AND NUMBER OF MANHOLE

STORM SEWER PLAN AND PROFILE
(continued)

11. DROP INLETS

    (A) STATIONING

    (B) TOP OF GRATE AND TOP OF CURB/NOSE AT GRATE ELEVATION

    (C) INVERT ELEVATION

    (D) TYPE, NUMBER OF GRATES, AND DROP INLET NUMBER (TWO (2) GRATE MINIMUM)

    (E) STORMWATER DISCHARGE - EXPECTED AND CAPACITY

12. DROP INLET PIPE (LATERALS)

    (A) SIZE AND TYPE OF PIPE

    (B) TYPE OF CONNECTOR

    (C) STORMWATER DISCHARGE - EXPECTED, CAPACITY, AND VELOCITY(IES)

13. SHOW EXISTING DRAINAGE STRUCTURES IN DASHED LINE AND INDICATE SIZE AND TYPE OF STRUCTURE

B. STORM SEWER PROFILE

1. STATIONING ALONG CENTERLINE OF STREET AT EVERY 100 FEET
2. TYPE AND SIZE OF EXISTING DRAINAGE STRUCTURES
3. EXISTING GROUND PROFILE AND PROPOSED TOP OF PAVEMENT
4. PROPOSED STORM SEWER PROFILE WITH PERCENT SLOPE
5. TYPE AND SIZE OF PIPE
6. HYDRAULIC GRADIENT LINE PROFILE WITH ELEVATION SHOWN AT EVERY MANHOLE AND/OR DROP INLETS

STORM SEWER PLAN AND PROFILE
(continued)

7. MANHOLE

   (A) SIZE, TYPE, AND MANHOLE NUMBER

   (B) TOP INVERT ELEVATION

   (C) CENTERLINE STATIONING

   (D) INVERT OF CONNECTOR LATERAL - SIZE AND TYPE OF PIPE

8. DROP INLETS

   (A) TYPE, NUMBER OF GRATES AND DROP INLET NUMBER (TWO (2) GRATE MINIMUM)

   (B) TOP OF GRATE AND INVERT ELEVATIONS

   (C) CENTERLINE STATIONING

   (D) STORMWATER DISCHARGE - EXPECTED AND CAPACITY

9. CONNECTOR PIPES (INLETS LATERALS)

   (A) TYPE AND SIZE OF PIPE

   (B) INVERT AT MAIN STORM SEWER

   (C) CENTERLINE STATIONING

   (D) STORMWATER DISCHARGE - EXPECTED, CAPACITY, AND VELOCITY(IES)

STORM SEWER PLAN AND PROFILE
(continued)

10. EXISTING SANITARY SEWER

    (A) SANITARY SEWER LINE

        (i.) PROFILE OF SANITARY SEWER

        (ii.) TOP MANHOLE AND INVERT ELEVATIONS

        (iii.) TYPE AND SIZE OF PIPE

        (iv.) PERCENT GRADE

        (v.) DETAIL INFORMATION OF SANITARY SEWER CONFLICTS

DETAIL SHEET

WHERE APPLICABLE, THE FOLLOWING SHALL BE PROVIDED:

A. DROP INLET(S)

B. MANHOLE(S) AND JUNCTION BOX(ES)

C. SURVEY MONUMENTS

D. STORM SEWER TRENCH CROSS-SECTION

E. PIPE CONCRETE COLLAR(S)

F. ROCKWALL FENCING

G. GUARD RAIL(S), BARRICADE(S), AND SIGNAGE

H. BOX CULVERTS

I. RETAINING WALL(S) (LOCATION ONLY, UNLESS TO BE BUILT BY SUBDIVIDER)

J. FOOTING(S)

K. CHANNEL CONCRETE LINING(S) - CROSS SECTIONS

L. SPILLWAYS

M. SEWER PIPE(S) - THRUST BLOCK(S)

N. SEEPAGE LINE(S) DETAILS

O. STORM SEWER OUTLET STRUCTURE(S)

P. BASIN(S) PLAN AND CROSS SECTIONS

Q. CONFLICTS WITH EXISTING IRRIGATION FACILITIES OR UTILITIES

CONSTRUCTION PHASING PLAN

WHERE APPLICABLE:

A. SHOW ENTIRE LIMITS OF PROJECT

B. INDICATE LIMITS OF INDIVIDUAL CONSTRUCTION PHASE BY STATIONS

C. TEMPORARY DRAINAGE PHASING PLAN

SECTION 2

SECTION 2

DRAINAGE AND DRAINAGE STRUCTURES

TITLE	PAGE
RETENTION BASIN DESIGN	2-1
RETENTION BASIN DESIGN REQUIREMENTS	2-2A thru 2-2B
RETENTION BASIN DESIGN (DRAWING)	2-3
DETENTION BASIN DESIGN	2-4
DETENTION BASIN DESIGN REQUIREMENTS	2-5
DETENTION BASIN (DRAWING)	2-6
PERMANENT ELEVATION MARKER (FOR ON-SITE PONDING)	2-7
POND DEPTH GAUGE	2-8
LEFT BLANK FOR FUTURE USE	2-9
LEFT BLANK FOR FUTURE USE	2-10
LEFT BLANK FOR FUTURE USE	2-11
LEFT BLANK-FOR FUTURE USE	2-12
LEFT BLANK-FOR FUTURE USE	2-13
LEFT BLANK-FOR FUTURE USE	2-14
LEFT BLANK-FOR FUTURE USE	2-15
MANHOLE RING	2-16
MANHOLE COVER	2-17
GRATED MANHOLE COVER	2-18
PENETRATION APRON	2-19
48" DIAMETER STANDARD CONICAL MANHOLE	2-20
48" DIAMETER PRE-CAST MANHOLE	2-21
72" DIAMETER PRE-CAST MANHOLE	2-22
72" DIAMETER CAST-IN-PLACE MANHOLE	2-23
72" CONCRETE MANHOLE COVER	2-24
CONCRETE PIPE COLLAR	2-25

SECTION 2

DRAINAGE AND DRAINAGE STRUCTURES
(continued)

TITLE	PAGE
CONNECTION AT PRE-CAST JUNCTION BOXES OR EXISTING MANHOLES	2-26
PRE-FABRICATED REINFORCED CONCRETE PIPE WYE	2-27
STANDARD MANHOLE SPECIFICATIONS	2-28
GRATE AND FRAME FOR DROP INLET	2-29
DROP INLET TYPE I	2-30
DROP INLET TYPE II	2-31
DROP INLET TYPE III	2-32
OFF-STREET STORM INLET DETAIL	2-33
FLUME DESIGN	2-34
CONCRETE FLUME WITHIN DRAINAGE RIGHT-OF-WAY	2-35A
TYPICAL CONCRETE DRAINAGE FLUMES	2-35B
SMALL WALL OPENING FOR DRAINAGE	2-35C
FLUME DESIGN SECTION	2-36
CONCRETE CHANNEL TYPE I	2-37
CONCRETE CHANNEL TYPE I END WALL DETAIL	2-38
CHANNEL LINING AT PIPE DISCHARGE	2-39
CONCRETE JOINTS	2-40
WATERSTOP DETAIL	2-41
DEBRIS TRAP/SAFETY GRATE	2-42
NO TRESPASSING WARNING SIGN	2-43
CURB OPENING FOR DRAINAGE	2-44
MODIFIED SIDEWALK DETAILS "A" & "B"	2-45

RETENTION BASIN DESIGN

DEFINITION: A MANMADE OR NATURAL RESERVOIR, EITHER PUBLIC OR PRIVATE, DESIGNED TO COMPLETELY RETAIN A SPECIFIED AMOUNT OF STORM WATER RUNOFF WITHOUT GRAVITY RELEASE.

DESIGN CRITERIA: THE DESIGN STORM FOR RETENTION BASINS IS 4" OF RAINFALL IN THREE HOURS OVER AN AREA OF 200 ACRES OR LESS (FOR AREAS OVER 200 ACRES SEE 2-9)

TOTAL RUNOFF FORMULA: $QT = ARC/12$

QT	=	TOTAL RUNOFF IN ACRE-FEET
A	=	100% OF CONTRIBUTING WATERSHED AREA IN ACRES
R	=	RAINFALL IN INCHES
C	=	RUNOFF FACTOR INCHES (SEE NO. 2-10)

STORAGE CAPACITY: A RETENTION BASIN MUST HAVE STORAGE CAPACITY AS FOLLOWS:

1. 100% OF THE DESIGN STORM

RETENTION BASIN DESIGN REQUIREMENTS

1. SIDE SLOPES SHALL NOT EXCEED FOLLOWING MAXIMUMS, UNLESS SATISFACTORY GEOTECHNICAL REPORT IS SUBMITTED:

   A. IN COHESIVE SOIL: THREE HORIZONTAL TO ONE VERTICAL (3:1)
   B. IN NON-COHESIVE SOIL: THREE HORIZONTAL TO ONE VERTICAL (3:1)

   NOTE: SOILS HAVING A PLASTICITY INDEX (PI) OF 8 OR ABOVE ARE CONSIDERED COHESIVE.

2. AN EROSION CONTROL PLAN IS REQUIRED FOR NON-COHESIVE SOILS.

3. RETENTION BASINS WITH SIDE SLOPES GREATER THAN 12% SHALL BE ENCLOSED WITH A SIX (6) FOOT HIGH CHAINLINK FENCE, EXCEPT THAT THE CHAINLINK FENCE MAY BE SUBSTITUTED WITH MASONRY OR ROCKWALL, WROUGHT IRON FENCING OR A COMBINATION THEREOF. THE HEIGHT SHALL BE MEASURED FROM THE GROUND INSIDE OR OUTSIDE THE WALL WHICHEVER IS THE HIGHER

4. BORING TESTS SHALL BE TO A DEPTH OF FIVE (5) FEET BELOW THE PROPOSED BASIN INVERT. THE BOTTOM OF THE BASIN SHALL BE A MINIMUM OF 24 INCHES ABOVE THE HIGH WATER TABLE. PERCOLATION TESTS IN THE VALLEY AREAS, SHALL BE PERFORMED ACCORDING TO ASTM-5126 DURING PEAK IRRIGATION SEASON BETWEEN AUGUST AND SEPTEMBER. STORM WATER, WITHIN THE BASIN, SHALL PERCOLATE WITHIN 72 HOURS. A GEOTECHNICAL INVESTIGATION, PERFORMED BY A LICENSED PROFESSIONAL GEOTECHNICAL ENGINEER, SHALL BE SUBMITTED PRIOR TO FINAL APPROVAL OF THE DEVELOPMENT PLANS. THE REPORT SHALL CONTAIN, AT A MINIMUM, SUBSURFACE SOIL PROFILE(S) AND PERCOLATION TEST RESULTS.

5. PROVIDE ONE (1), 18 FT MINIMUM WIDE DOUBLE GATE, ACCESSIBLE FROM PUBLIC RIGHT-OF-WAY AND ALIGNED WITH THE ACCESS RAMP. THE GATE SHALL BE CHAINLINK FENCE, EXCEPT THAT THE GATE SHALL BE WROUGHT IRON WHERE A MASONRY OR ROCKWALL IS SUBSTITUTED FOR A CHAINLINK FENCE.

6. PROVIDE AN ACCESS RAMP MEETING THE FOLLOWING CRITERIA:

   MAXIMUM SLOPE: 15%
   MINIMUM WIDTH: 15 FT
   RAMP MATERIAL: MINIMUM PI OF 8, WITH NO LOOSE MATERIAL
   COMPACTION: MINIMUM 90% PER ASTM D-1557

RETENTION BASIN DESIGN REQUIREMENTS
(continued)

7. RETENTION BASINS WITH DEPTHS OF 10 FEET OR MORE SHALL HAVE MAINTENANCE ROADS WITH A MINIMUM WIDTH OF 15 FEET. RETENTION BASINS WITH DEPTHS OF LESS THAN 10 FEET SHALL HAVE A FIVE (5) FOOT BENCH TERRACE ADJACENT TO THE PROPERTY LINE.

8. THE DESIGN WATER DEPTH IN RETENTION BASINS SHALL NOT EXCEED TWENTY (20) FEET, EXCEPT AS OTHERWISE APPROVED BY THE CITY ENGINEER WHEN BENCHING, SHALLOWER SLOPES OR OTHER MEASURES ARE PROVIDED.

9. THE ALLOWABLE CLEARANCE AT THE BOTTOM OF THE BASIN SHALL BE 25 FEET IN DIAMETER, MINIMUM.

10. IF AN ACCESS ROAD IS REQUIRED, A MINIMUM WIDTH OF TWENTY (20) FEET FOR THE ACCESS ROAD SHALL BE PROVIDED FROM THE STREET R.O.W. TO THE TOP OF THE BASIN.

Note

Maximum design water depth is 20 feet, Refer to Item 8, "Retention Basin Design Requirements" Section 2-2B of this manual.

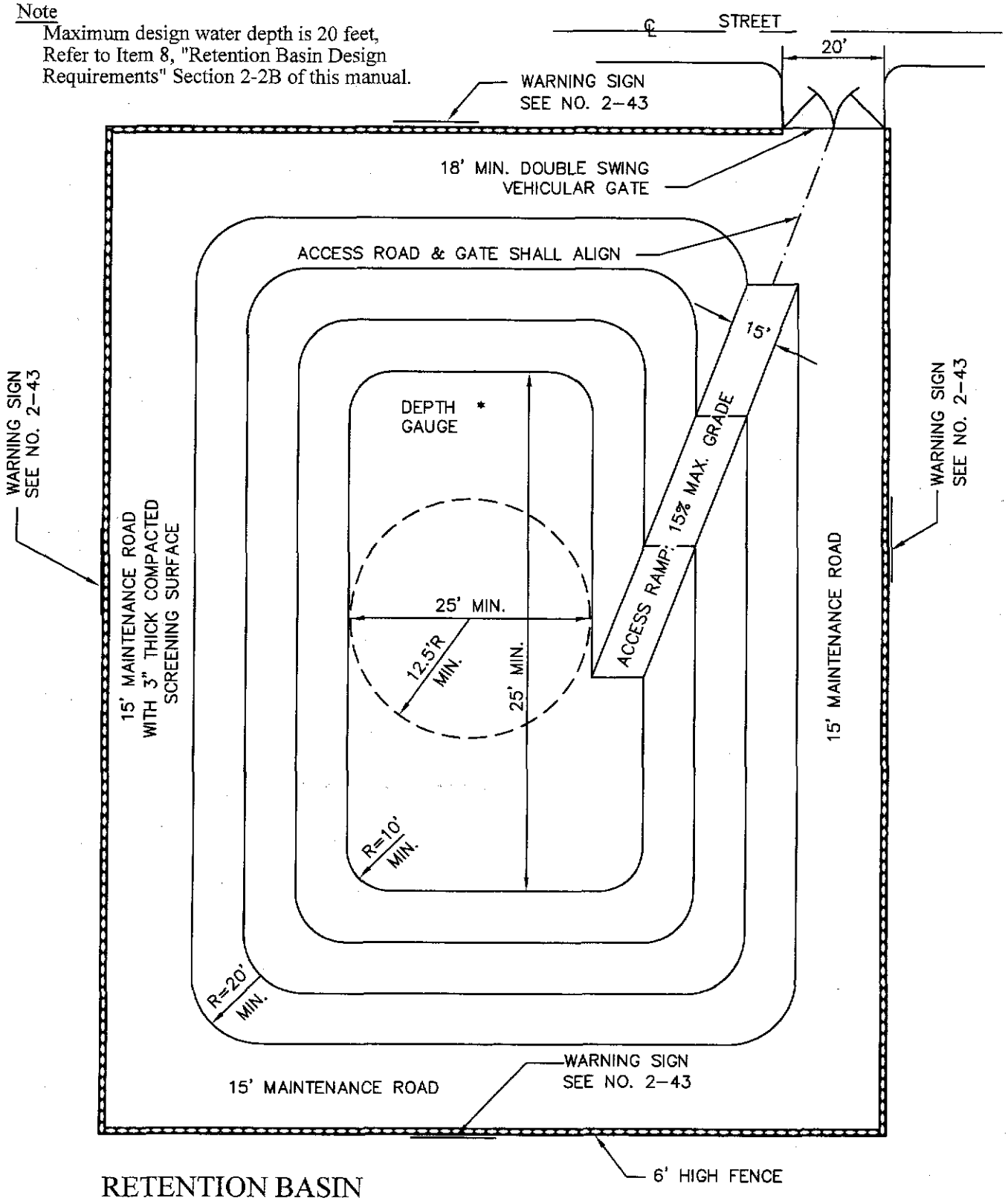

RETENTION BASIN

TITLE 19 - SUBDIVISION ORDINANCE

ENGINEERING DEPARTMENT

DESIGN STANDARDS FOR CONSTRUCTION

RETENTION BASIN DESIGN (DRAWING) 2-3

Approved By R. A. SHUBERT	Checked By H. M. E.
Date JUNE 03, 2008	Drawn By QEC / J. R.

DETENTION BASIN DESIGN

DEFINITION: A DETENTION BASIN IS A MANMADE OR NATURAL RESERVOIR, EITHER PUBLIC OR PRIVATE, DESIGNED TO RESTRICT THE FLOW OF STORMWATER TO A PRESCRIBED MAXIMUM RATE THROUGH A CONTROLLED RELEASE BY GRAVITY, AND TO CONCURRENTLY DETAIN THE EXCESS WATERS THAT ACCUMULATE BEHIND THE CONTROL STRUCTURE.

DESIGN CRITERIA: THE DESIGN STORM WILL BE A 4" RAINFALL IN THREE (3) HOURS OVER AN AREA OF 200 ACRES OR LESS. (FOR AREAS LARGER THAN 200 ACRES, SEE NO. 2-9, EXAMPLE INCLUDED).

TOTAL RUNOFF FORMULA: $QT = ARC/12$

QT	=	TOTAL RUNOFF IN ACRE-FEET
A	=	100% OF CONTRIBUTING WATERSHED AREA IN ACRES
R	=	RAINFALL IN INCHES
C	=	RUNOFF FACTOR (SEE CoEP "DRAINAGE DESIGN MANUAL")

THE DETENTION BASIN WILL BE DESIGNED UTILIZING GOOD ENGINEERING PRACTICES AND ACCEPTED METHODS (HEC-1) WHEREBY 100% OF THE RUNOFF VOLUME IS TO BE PROPERLY MANAGED THROUGH THE USE OF CHANNELS AND BASINS.

A GEOTECHNICAL INVESTIGATION, PERFORMED BY A LICENSED PROFESSIONAL GEOTECHNICAL ENGINEER, SHALL BE SUBMITTED PRIOR TO FINAL APPROVAL OF DEVELOPMENT PLANS. THE REPORT SHALL CONTAIN, AT A MINIMUM, SUBSURFACE SOIL PROFILE(S) AND PERCOLATION TEST RESULTS.

DETENTION BASIN DESIGN REQUIREMENTS

1. EARTH LEVEE DESIGN: THE DESIGN OF EARTH LEVEES SHALL BE IN ACCORDANCE WITH BOTH ACCEPTED ENGINEERING PRACTICE AND FEMA (FEDERAL EMERGENCY MANAGEMENT AGENCY) GUIDELINES AND SHALL INCLUDE A SEEPAGE ANALYSIS.

2. SPILLWAY: AN EMERGENCY CONCRETE SPILLWAY SHALL BE PROVIDED WITH A CAPACITY EQUAL TO THE PEAK DISCHARGE OF THE DESIGN STORM. (SEE 2-6,2-9,2-10,2-11) DEPTH OF FLOW OVER THE CREST OF THE SPILLWAY SHALL BE NO MORE THAN ONE (1) FOOT.

3. SIDE SLOPES SHALL NOT EXCEED FOLLOWING MAXIMUMS, UNLESS OTHERWISE RECOMMENDED BY A LICENSED PROFESSIONAL GEOTECHNICAL ENGINEER:

   A. IN COHESIVE SOIL, THREE (3) HORIZONTAL TO ONE (1) VERTICAL (3:1).
   B. IN NON-COHESIVE SOIL, THREE (3) HORIZONTAL TO ONE (1) VERTICAL (3:1).

4. PROVIDE AN ACCESS RAMP MEETING THE FOLLOWING CRITERIA:

   MAXIMUM SLOPE: 15%
   MINIMUM WIDTH: 15 FT
   RAMP MATERIAL: MINIMUM PI OF 8, WITH NO LOOSE MATERIAL
   COMPACTION: MINIMUM 90% PER ASTM D-1557

5. FOR MAINTENANCE PURPOSES, ONE (1) 18-FOOT WIDE DOUBLE SWING GATE ACCESSIBLE FROM PUBLIC RIGHT-OF-WAY SHALL BE PROVIDED.

6. DETENTION BASINS WITH DEPTHS OF 10 FEET OR MORE SHALL HAVE MAINTENANCE ROADS WITH A MINIMUM WIDTH OF 15 FEET AND A MAXIMUM SLOPE OF 15%. DETENTION BASINS WITH DEPTHS OF LESS THAN 10 FEET SHALL HAVE A FIVE (5) FOOT BENCH TERRACE ADJACENT TO THE PROPERTY LINE.

7. DETENTION BASINS SHALL BE ENCLOSED WITH A 6-FOOT CHAINLINK FENCE, EXCEPT THAT THE CHAINLINK FENCE MAY BE SUBSTITUTED WITH MASONRY OR ROCK WALL, WROUGHT IRON FENCING OR A COMBINATION THEREOF. THE HEIGHT SHALL BE MEASURED FROM THE GROUND INSIDE OR OUTSIDE THE WALL, WHICHEVER IS THE HIGHER.

8. THE DESIGN WATER DEPTH IN DETENTION BASINS SHALL NOT EXCEED TWENTY (20) FEET, EXCEPT AS OTHERWISE APPROVED BY THE CITY ENGINEER WHEN BENCHING, SHALLOWER SLOPES OR OTHER MEASURES ARE PROVIDED.

9. THE MINIMUM ALLOWABLE CLEARANCE AT THE BOTTOM OF BASIN SHALL BE 25 FEET IN DIAMETER.

10. THE OUTLET SHALL EMPTY THE BASIN WITHIN 72 HOURS FROM THE END OF DESIGN INTENSITY STORM.

Note
Maximum design water depth is 20 feet, Refer to Item 9, "Detention Basin Design Requirements" Section 2-5 of this manual.

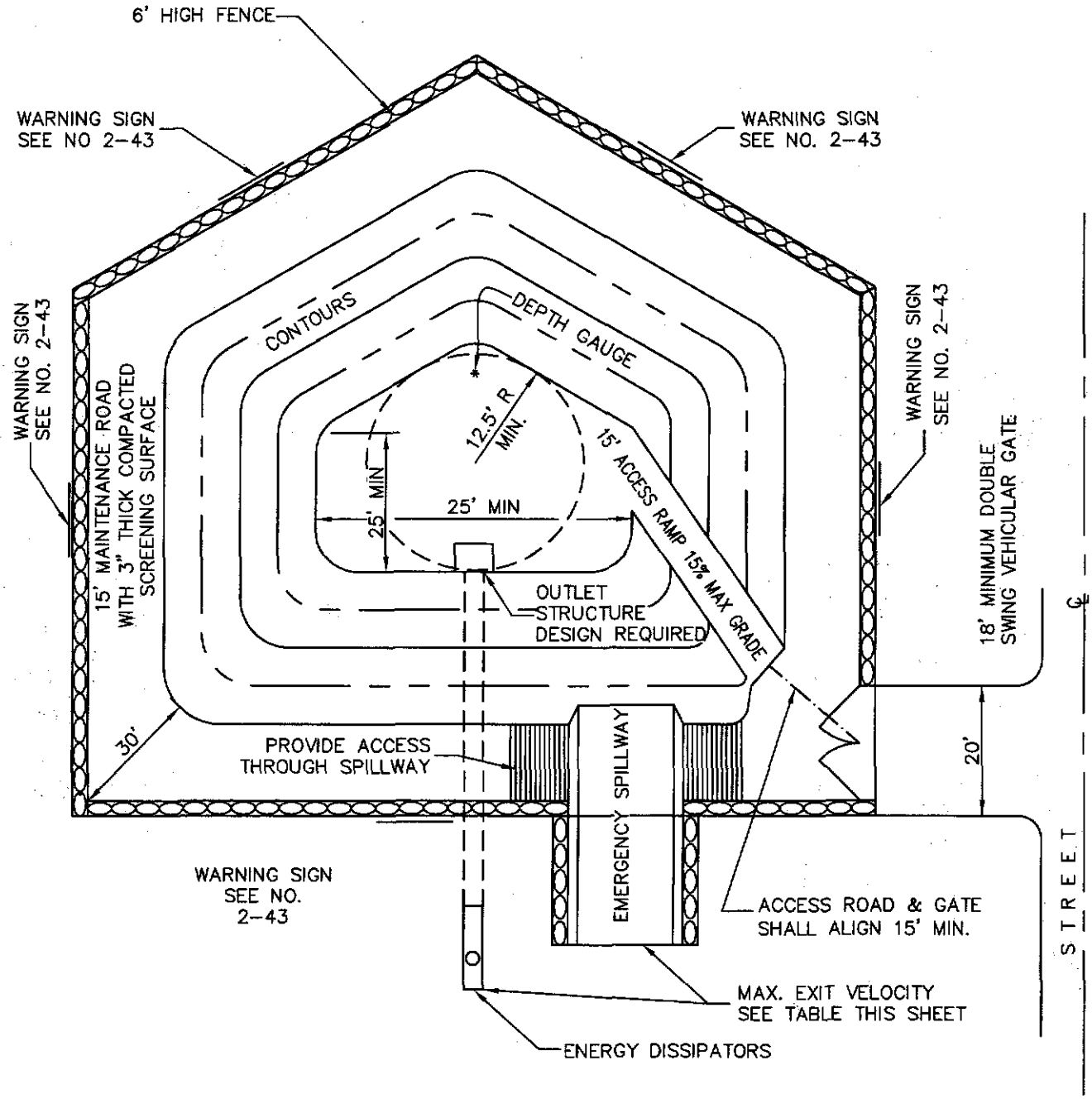

DETENTION BASIN

MAX. VELOCITY @ DISCHARGE POINTS
5 fps FOR UNPROTECTED GROUND
8 fps FOR OTHER GROUND COVER MATERIALS

TITLE 19 - SUBDIVISION ORDINANCE

ENGINEERING DEPARTMENT

DESIGN STANDARDS FOR CONSTRUCTION

DETENTION BASIN DESIGN (DRAWING) 2-6

Approved By R. A. SHUBERT	Checked By H. M. E.
Date JUNE 03, 2008	Drawn By QEC / J. R.

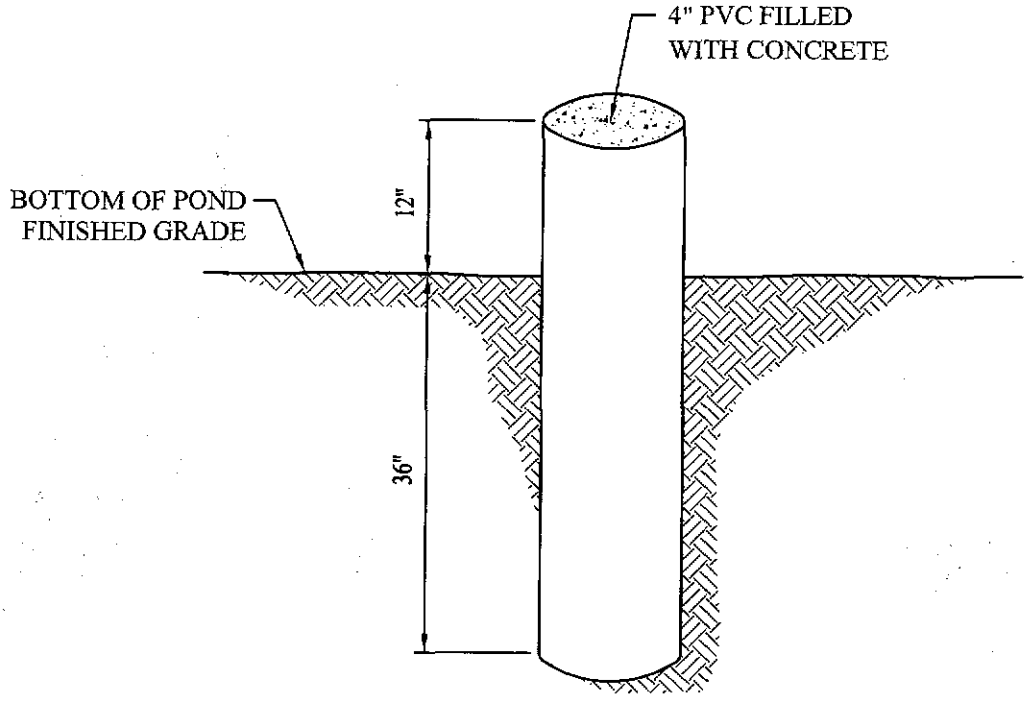

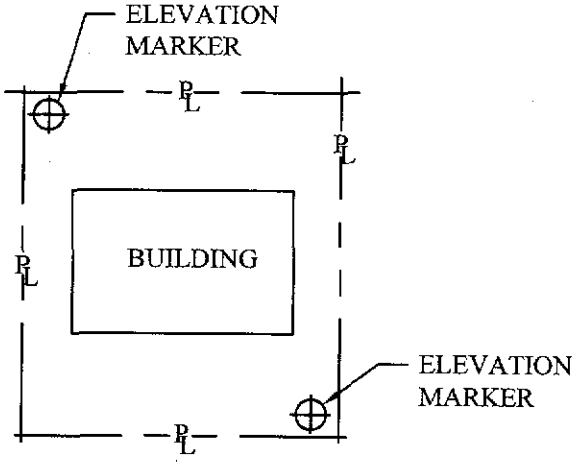

MARKERS TO BE PLACED AT CORNER OF FRONT AND BACK YARDS.

PERMANENT ELEVATION MARKER

FOR ON SITE PONDING N.T.S.

TITLE 19 - SUBDIVISION ORDINANCE

ENGINEERING DEPARTMENT

DESIGN STANDARDS FOR CONSTRUCTION

PERMANENT ELEVATION MARKER FOR ON-SITE PONDING

2-7

Approved By R. A. SHUBERT	Checked By H. M. E.
Date JUNE 03, 2008	Drawn By QEC / J. R.

NOTE
ALTERNATES WILL BE ALLOWED WITH THE PRIOR REVIEW AND APPROVAL OF THE CITY ENGINEER.

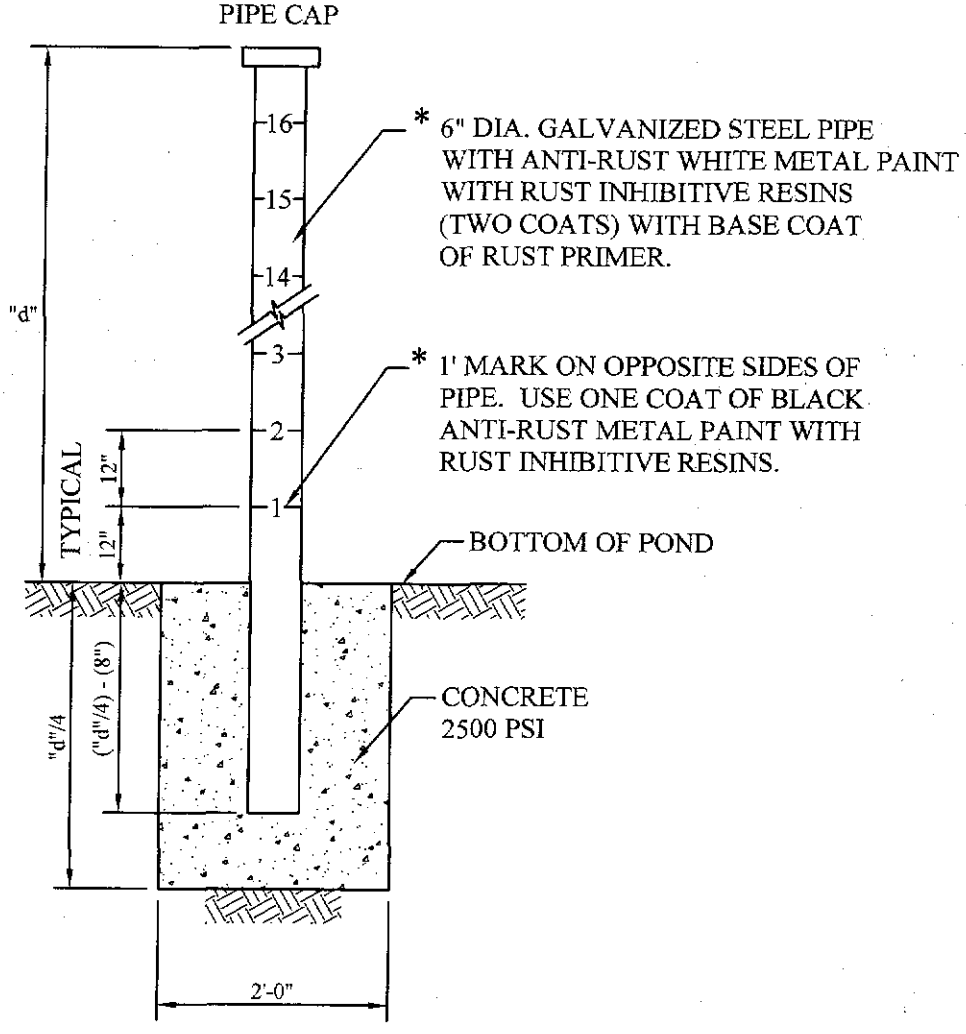

POND DEPTH GAUGE

SCALE: 1/2"=1'-0"

* NOTES:
1. CONSULT WITH PAINT MANUFACTURER FOR PRODUCTS THAT CAN SUSTAIN LONG PERIODS OF MOISTURE.
2. "d" = depth

TITLE 19 - SUBDIVISION ORDINANCE

ENGINEERING DEPARTMENT

DESIGN STANDARDS FOR CONSTRUCTION

POND DEPTH GAUGE

2-8

Approved By R. A. SHUBERT	Checked By H. M. E.
Date JUNE 03, 2008	Drawn By QEC / J. R.

INTENTIONALLY LEFT BLANK FOR FUTURE USE

INTENTIONALLY LEFT BLANK FOR FUTURE USE

INTENTIONALLY LEFT BLANK FOR FUTURE USE

INTENTIONALLY LEFT BLANK FOR FUTURE USE

INTENTIONALLY LEFT BLANK FOR FUTURE USE

INTENTIONALLY LEFT BLANK FOR FUTURE USE

INTENTIONALLY LEFT BLANK FOR FUTURE USE

TITLE 19 - SUBDIVISION ORDINANCE

ENGINEERING DEPARTMENT

DESIGN STANDARDS FOR CONSTRUCTION

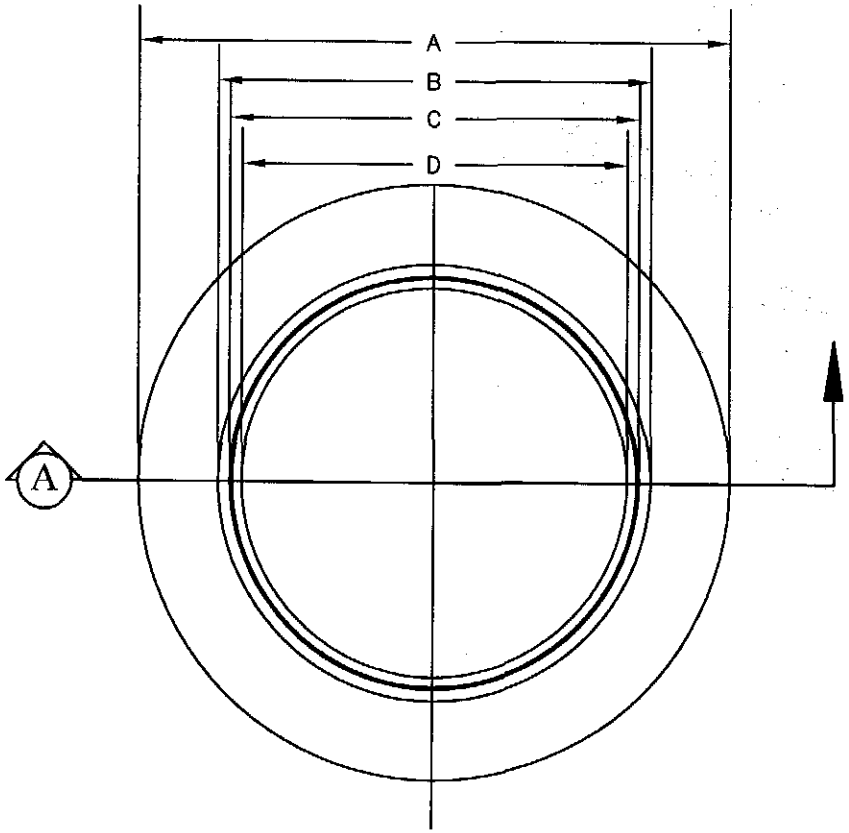

TOP VIEW

NOTE:
1. MATCHING SURFACES MARKED "MF" TO BE MACHINE FINISHED OF ANY IRREGULARITIES THAT WOULD PREVENT A SNUG FIT.
2. CASTING TO BE SMOOTH AND VOID OF AIR HOLES.

MANHOLE RING	48" MANHOLE	72" MANHOLE
WEIGHT	165 LBS.	225 LBS.
A	2'-10 1/2"	3'-6"
B	2'-1 1/4"	2'-8 3/4"
C	1'-10 1/2"	2'-6"
D	1'-11 7/8"	2'-7 3/8"

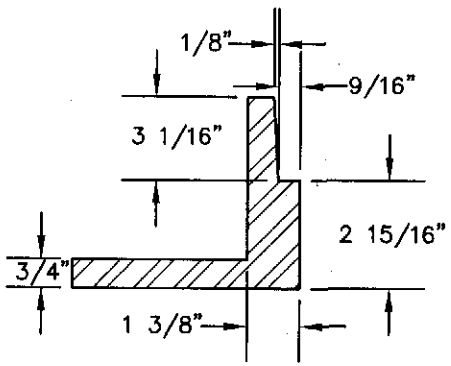

DETAIL

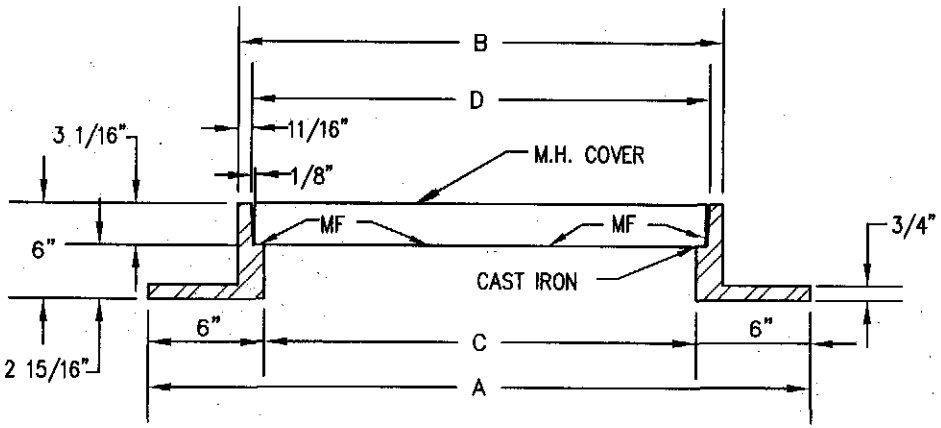

A SECTION

THE CITY OF EL PASO TEXAS

MANHOLE RING
2-16

Approved By R. A. SHUBERT
Date JUNE 03, 2008
Checked By H. M. E.
Drawn By QEC / J. R.

TITLE 19 - SUBDIVISION ORDINANCE

ENGINEERING DEPARTMENT

DESIGN STANDARDS FOR CONSTRUCTION

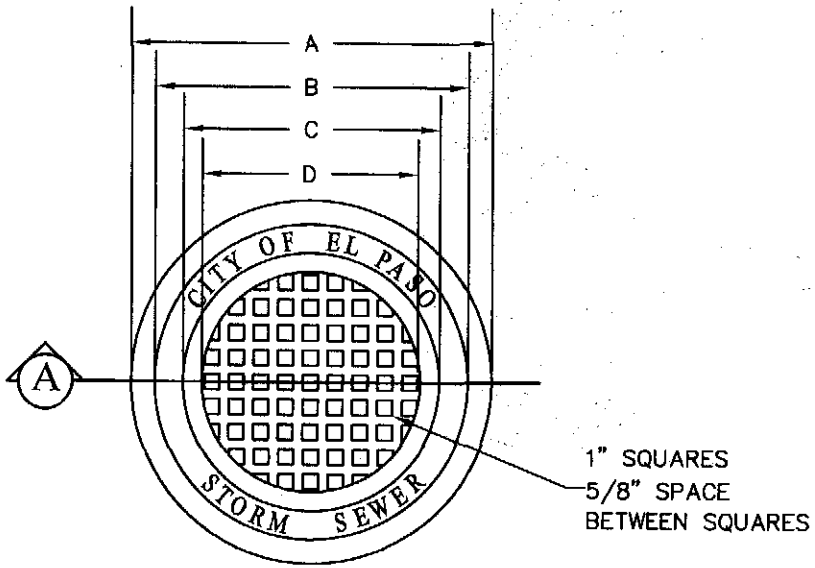

TOP VIEW

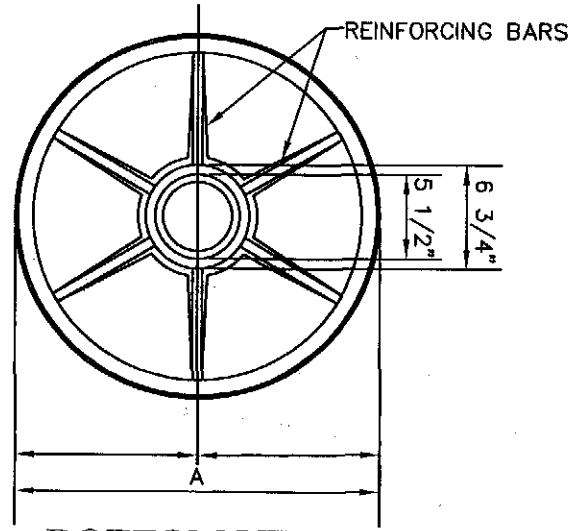

BOTTOM VIEW

GENERAL NOTES:

1. MATCHING SURFACES MARKED "MF" TO BE MACHINE FINISHED OF ANY IRREGULARITIES THAT WOULD PREVENT A SNUG FIT.
2. CASTING TO BE SMOOTH AND VOID OF AIR HOLES.

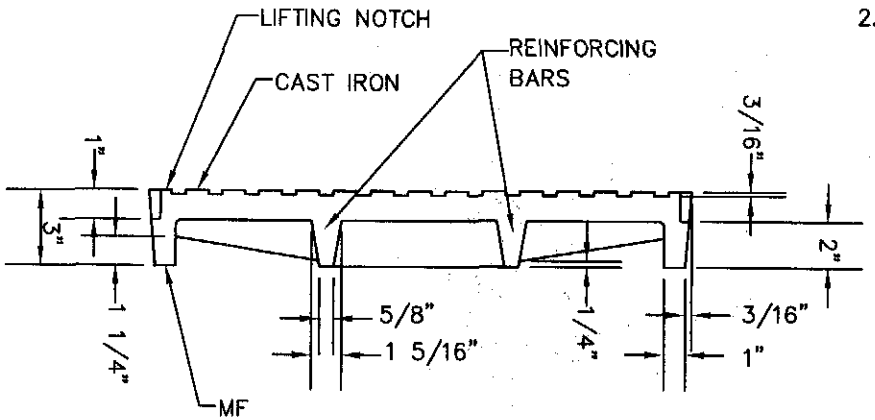

A SECTION

MANHOLE COVER	48" MANHOLE	72" MANHOLE
WEIGHT	175 LBS.	310 LBS.
A	1'-11 3/4"	2'-7 1/4"
B	1'-8 5/8"	2'-4 1/8"
C	1'-4 7/8"	2'-3/8"
D	1'-2 3/8"	1'-9 7/8"
E	11 7/8"	1'-3 5/8"

MANHOLE COVER
2-17

Approved By R. A. SHUBERT
Date JUNE 03, 2008

Checked By H. M. E.
Drawn By QEC / J. R.

TITLE 19 - SUBDIVISION ORDINANCE

ENGINEERING DEPARTMENT

DESIGN STANDARDS FOR CONSTRUCTION

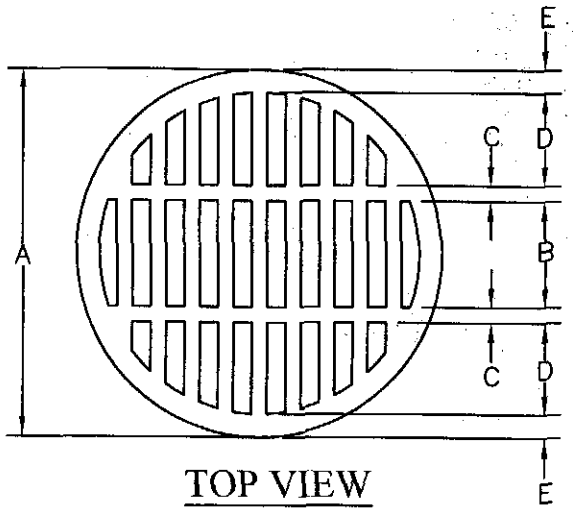

TOP VIEW

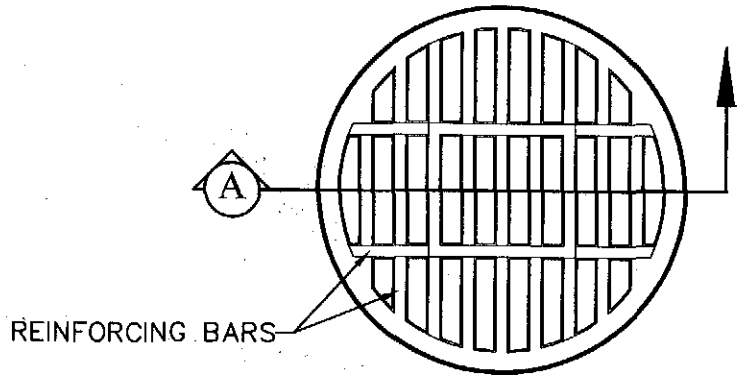

BOTTOM VIEW

NOTE:
THIS MANHOLE COVER FITS IN A STANDARD MANHOLE RING (SEE 2–16)

GENERAL NOTES:

1. MATCHING SURFACES MARKED "MF" TO BE MACHINE FINISHED OF ANY IRREGULARITIES THAT WOULD PREVENT A SNUG FIT.
2. CASTING TO BE SMOOTH AND VOID OF AIR HOLES.

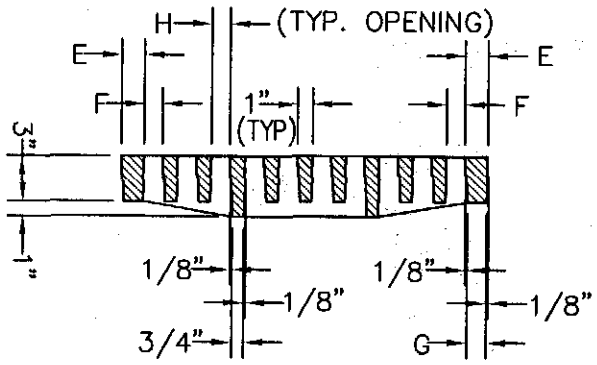

A SECTION VIEW

MANHOLE COVER	48" MANHOLE	72" MANHOLE
WEIGHT	175 LBS.	310 LBS.
A	1'–11 3/4"	2'–7 1/4"
B	6 1/2"	9"
C	1"	1 1/2"
D	6"	8"
E	1 5/8"	1 5/8"
F	1 1/4"	1"
G	1 3/8"	1 3/8"
H	1"	1"

GRATED MANHOLE COVER
2-18

Approved By R. A. SHUBERT
Date JUNE 03, 2008

Checked By H. M. E.
Drawn By QEC/J. R.

CONCRETE APRON FOR CIRCULAR PENETRATIONS IN ASPHALT PAVEMENTS				
"D" DIAMETER OF PENETRATION (INCHES)	"A" CONCRETE HORIZONTAL DIMENSION FROM PENETRATION (INCHES)	NUMBER OF NO. 3 REINFORCING STEEL BARS (INCHES)	"B" MINIMUM CLEARANCE FROM EDGE OF CONCRETE APRON TO CENTER OF NEAREST REBAR (INCHES)	"C" MINIMUM CLEARANCE FROM PENETRATION EDGE TO CENTER OF NEAREST REBAR (INCHES)
0 TO 6.01	6	1	1½	1½
6.01 TO 18.01	8	2	1½	1½
18.01 AND OVER	12	3	1½	1½

CONSTRUCTION NOTES:

1. ANY DISTURBED SUBGRADE UNDER THE CONCRETE APRON SHALL BE COMPACTED TO 95% DENSITY ± 3% OPTIMUM MOISTURE CONTENT IN ACCORDANCE WITH ASTM D-1557.
2. ANY DISTURBED COARSE UNDER THE CONCRETE APRON SHALL BE COMPACTED TO 100% DENSITY ± 2% OPTIMUM MOISTURE CONTENT IN ACCORDANCE WITH ASTM D-1557.
3. PROVIDE A MINIMUM OF 1 1/2" OF CONCRETE COVER FOR ALL REINFORCEMENT STEEL.
4. REINFORCING SHALL MEET ASTM C-478 AND TRAFFIC LOADING (HS-20).
5. NO. 3 REINFORCING STEEL HOOPS SHALL BE SPACED EQUALLY.

GENERAL NOTES:

1. THE PENETRATION APRON SHOULD BE CAST IN-PLACE CONCRETE. (MINIMUM 28 DAY COMPRESSIVE STRENGTH 4000 PSI. HIGH EARLY CONCRETE IS REQUIRED)
2. TOPS OF PENETRATION APRON SHALL BE FLUSH WITH ROADWAY SURFACE OR FINISHED GRADE UNLESS OTHERWISE SPECIFIED BY THE CITY ENGINEER.

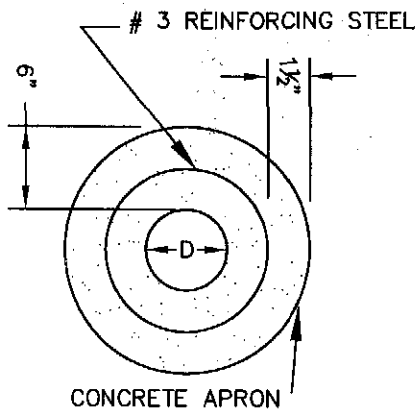

PENETRATION APRON

PLAN VIEW – SINGLE REBAR

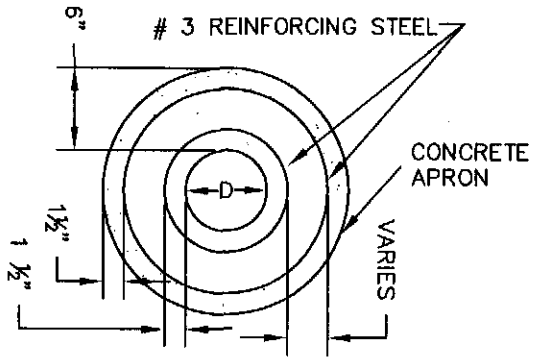

PENETRATION APRON

PLAN VIEW – 2 REBAR

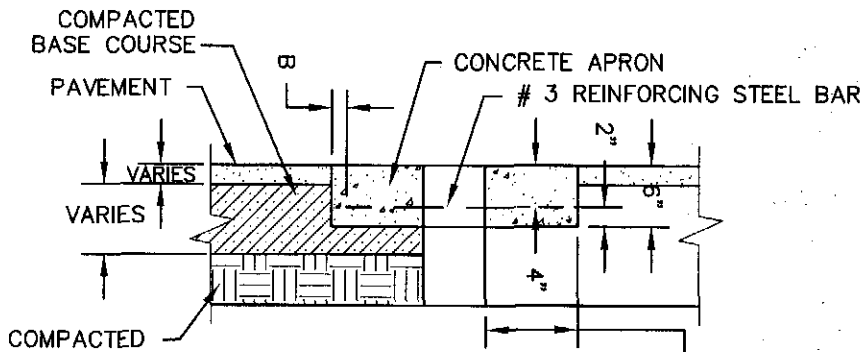

PENETRATION APRON

SECTION VIEW

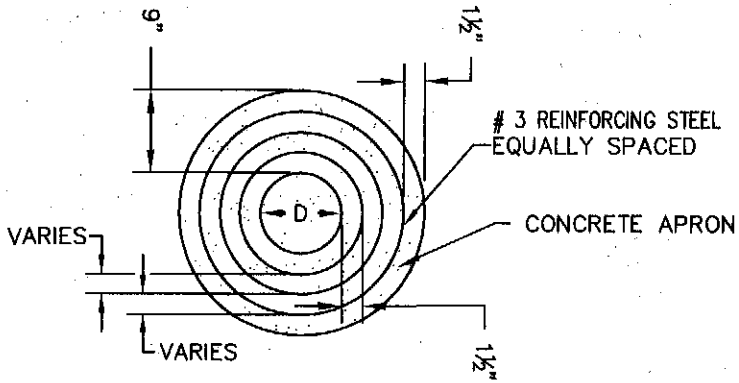

PENETRATION APRON

PLAN VIEW – THREE REBAR

TITLE 19 - SUBDIVISION ORDINANCE

ENGINEERING DEPARTMENT

DESIGN STANDARDS FOR CONSTRUCTION

PENETRATION APRON

2-19

Approved By R. A. SHUBERT
Date JUNE 03, 2008
Checked By H. M. E.
Drawn By QEC / J. R.

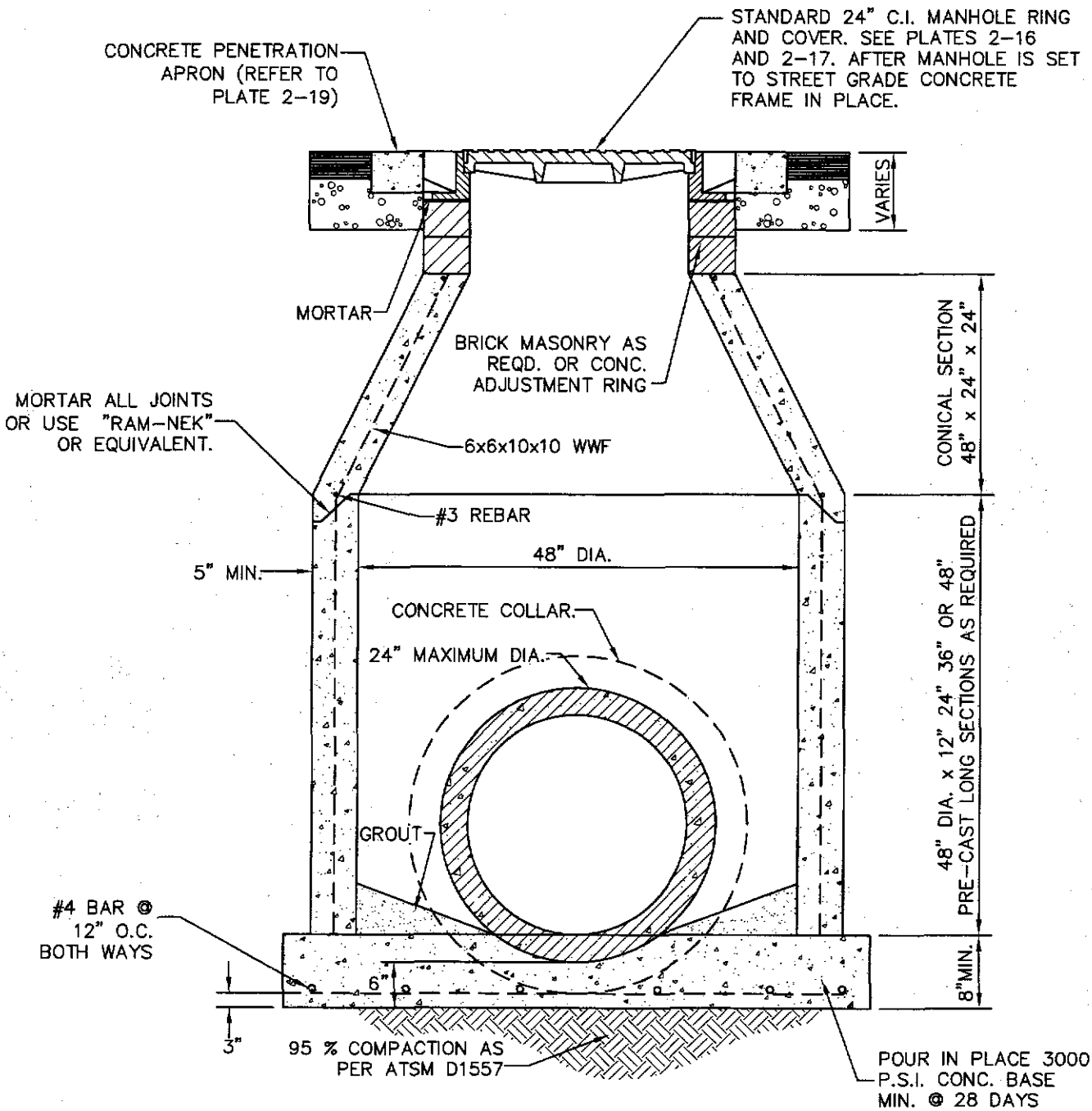

48" DIAMETER STANDARD MANHOLE

NTS

TITLE 19 - SUBDIVISION ORDINANCE

ENGINEERING DEPARTMENT

DESIGN STANDARDS FOR CONSTRUCTION

48" DIAMETER STANDARD CONICAL MANHOLE 2-20

Approved By R. A. SHUBERT	Checked By H. M. E.
Date JUNE 03, 2008	Drawn By QEC / J. R.

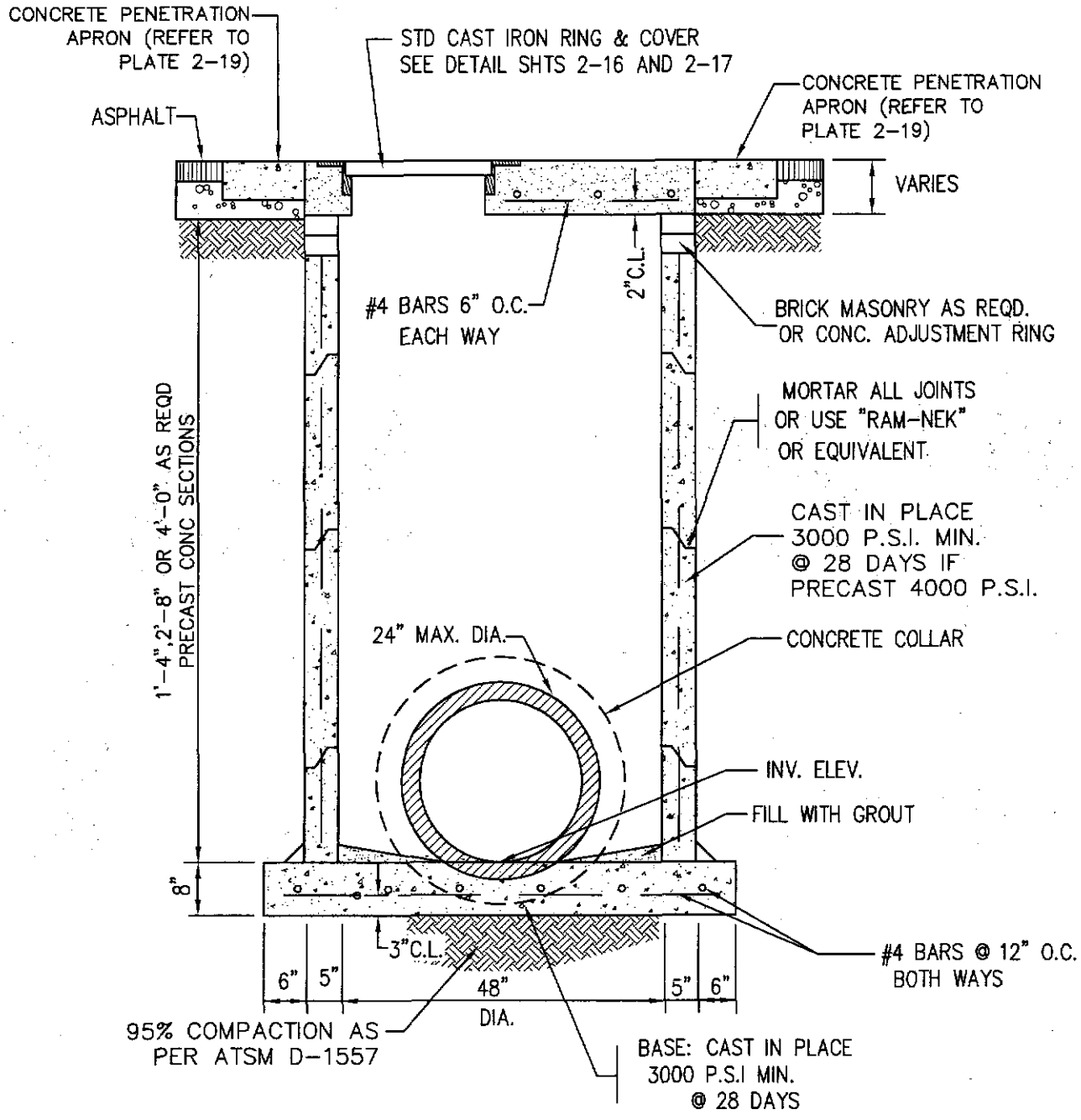

48" DIAMETER PRECAST MANHOLE SECTIONS

TITLE 19 - SUBDIVISION ORDINANCE

ENGINEERING DEPARTMENT

DESIGN STANDARDS FOR CONSTRUCTION

48" DIAMTER PRECAST MANHOLES
2-21

Approved By R. A. SHUBERT | Checked By H. M. E.
Date JUNE 03, 2008 | Drawn By QEC / J. R.

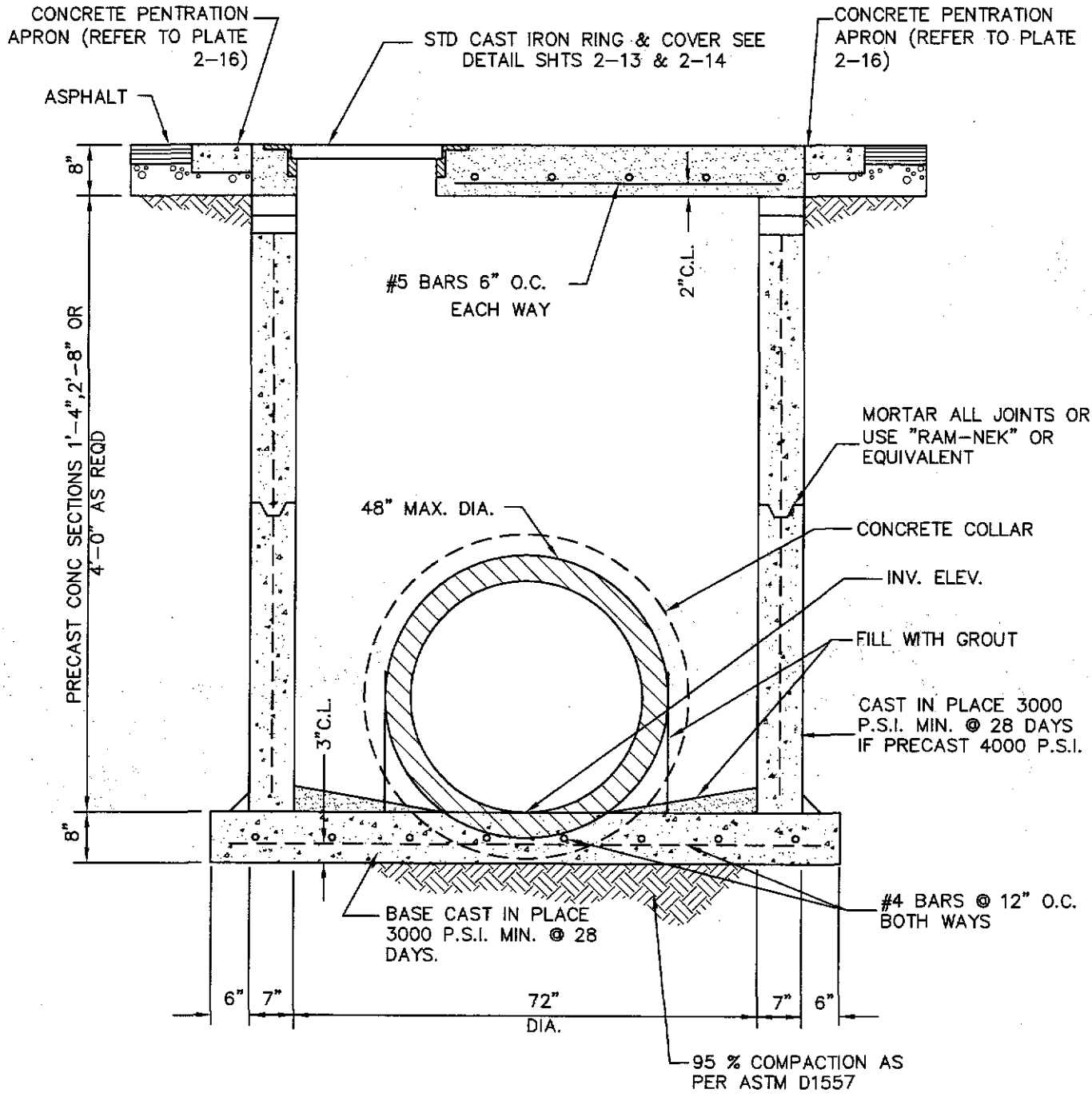

72" DIAMETER PRECAST MANHOLE SECTIONS

NTS

TITLE 19 - SUBDIVISION ORDINANCE

ENGINEERING DEPARTMENT

DESIGN STANDARDS FOR CONSTRUCTION

72" DIAMETER PRECAST MANHOLES
2-22

Approved By R. A. SHUBERT	Checked By H. M. E.
Date JUNE 03, 2008	Drawn By QEC / J. R.

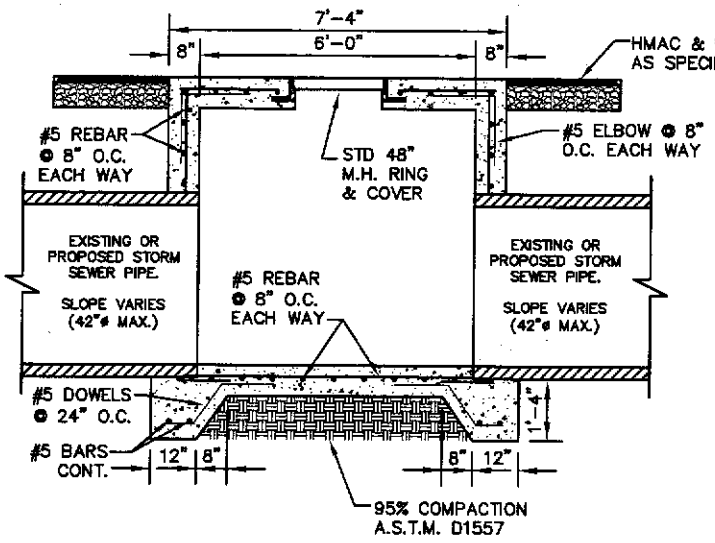

SECTION A-A

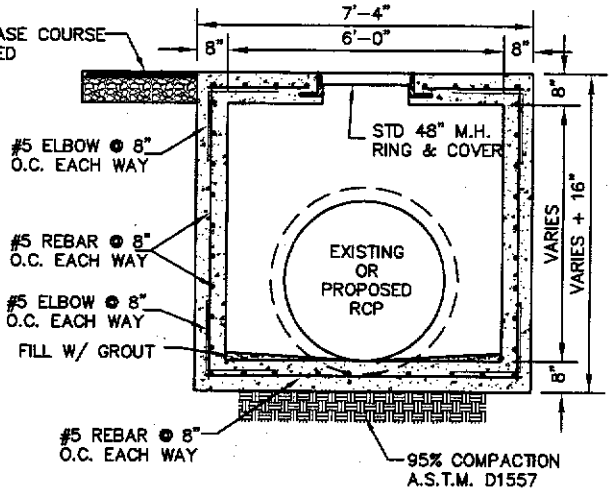

SECTION B-B

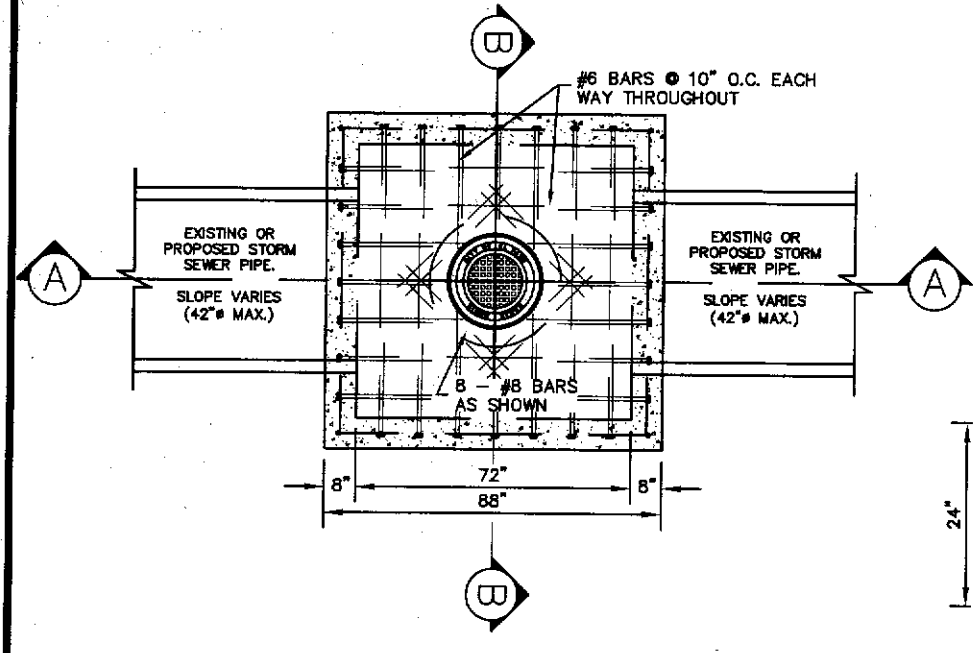

72" DIAMETER CAST-IN PLACE STANDARD MANHOLE

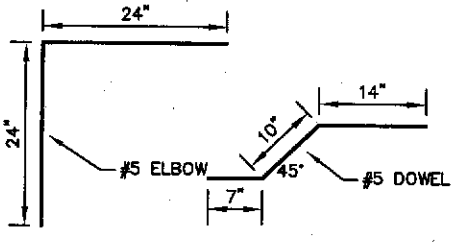

BENDING DETAIL

TITLE 19 - SUBDIVISION ORDINANCE

ENGINEERING DEPARTMENT

DESIGN STANDARDS FOR CONSTRUCTION

72" DIAMETER CAST-IN-PLACE MANHOLE 2-23

Approved By R. A. SHUBERT	Checked By H. M. E.
Date JUNE 03, 2008	Drawn By QEC / J. R.

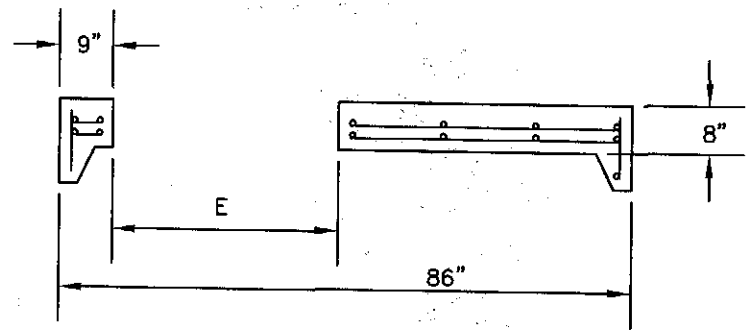

SECTION A-A

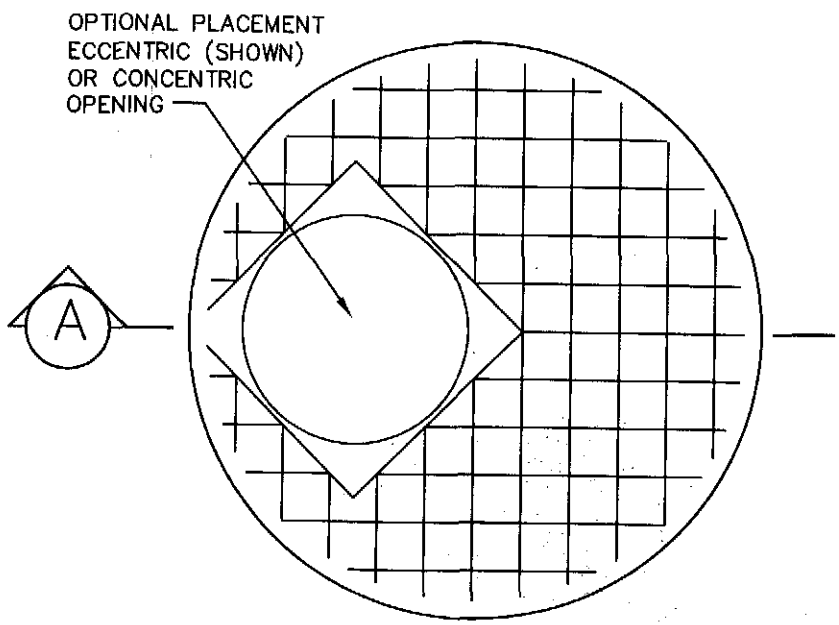

MANHOLE COVER FOR TYPE 72" MANHOLE

GENERAL NOTES:

1. ALL JOINTS TO BE TONGUE AND GROOVE AND SEALED WITH RAM-NEK OR EQUAL.
2. MANUFACTURER TO PROVIDE LIFTERS OF ADEQUATE SIZE AS NEEDED.

CONSTRUCTION KEY NOTES:

A. 4000 P.S.I. CONCRETE 28 DAYS.
B. KEYLOCK ADDS 8" TO VERTICAL HEIGHT.
C. RING & COVER OR SPECIAL LIDS TO MEET REQUIREMENTS. MAY BE CAST IN PLACE.
D. REINFORCING SHALL MEET A.S.T.M. C478-87 AND TRAFFIC LOADING (HS-20).
E. SIZE TO ACCOMMODATE TYPE 72" DIAMETER MANHOLE RING.

THE CITY OF EL PASO TEXAS

TITLE 19 - SUBDIVISION ORDINANCE

ENGINEERING DEPARTMENT

DESIGN STANDARDS FOR CONSTRUCTION

CONCRETE MANHOLE COVER FOR TYPE 72" MANHOLE

2-24

Approved By R. A. SHUBERT
Date JUNE 03, 2008

Checked By H. M. E.
Drawn By QEC / J.R.

D	L
12"	12"
18"	12"
24"	12"
36"	18"
48"	18"
54"	18"
60"	21"
66"	21"

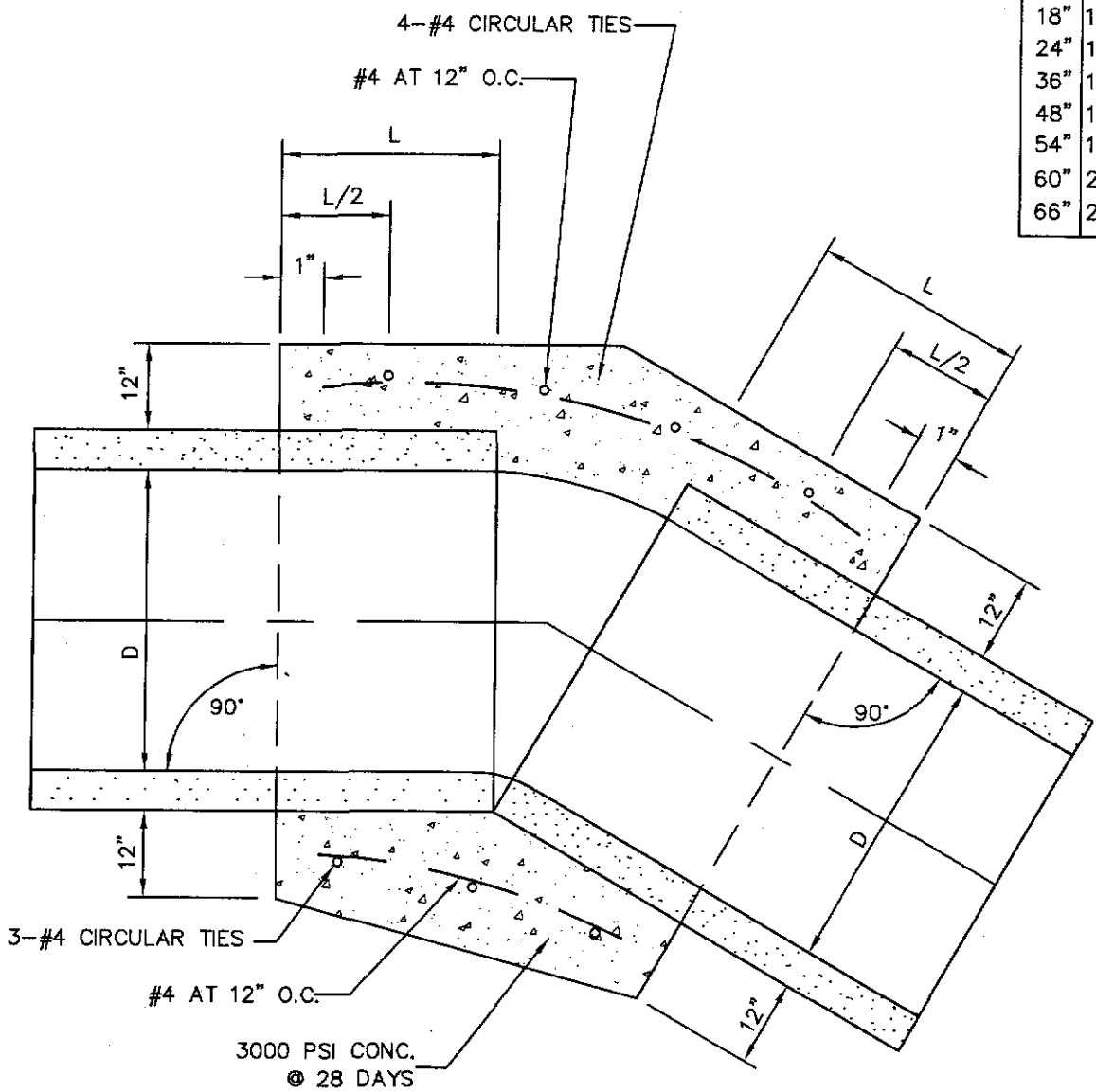

CONCRETE PIPE COLLAR

1. A CONCRETE COLLAR IS REQUIRED WHERE PIPES CHANGE IN HORIZONTAL OR VERTICAL ALIGNMENT.
2. FOR PIPES 24" OR LESS IN DIAMETER REINFORCE WITH W.W.M.

TITLE 19 - SUBDIVISION ORDINANCE

ENGINEERING DEPARTMENT

DESIGN STANDARDS FOR CONSTRUCTION

CONCRETE PIPE COLLAR
2-25

Approved By R. A. SHUBERT
Date JUNE 03, 2008

Checked By H. M. E.
Drawn By QEC / J. R.

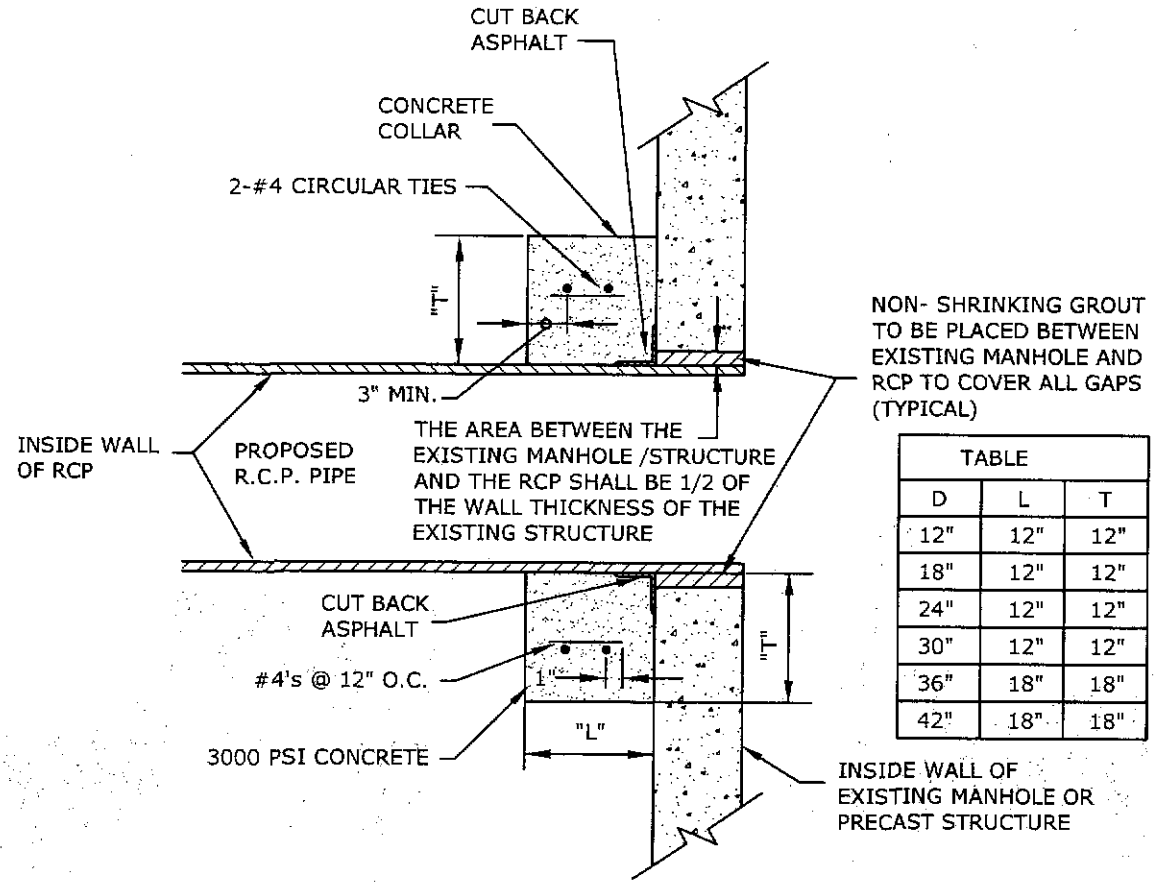

TABLE		
D	L	T
12"	12"	12"
18"	12"	12"
24"	12"	12"
30"	12"	12"
36"	18"	18"
42"	18"	18"

CONNECTION AT PRECAST JUNCTION BOXES OR EXISTING MANHOLES

SCALE: N.T.S.

TITLE 19 - SUBDIVISION ORDINANCE

ENGINEERING DEPARTMENT

DESIGN STANDARDS FOR CONSTRUCTION

CONNECTION AT PRECAST JUNCTION BOXES OR EXISTING MANHOLES
2-26

Approved By R. A. SHUBERT
Date JUNE 03, 2008

Checked By H. M. E.
Drawn By QEC / J. R.

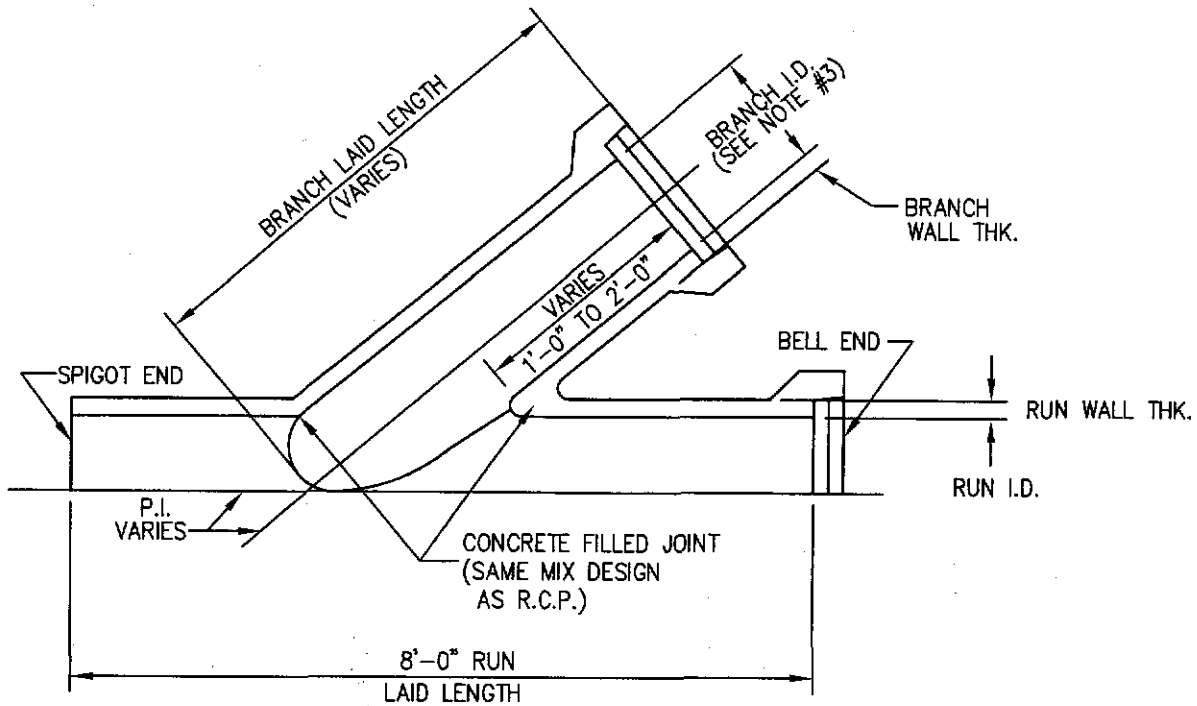

REINFORCED CONCRETE PIPE – WYE 18" THRU 96" DIA.

PLAN VIEW SECTION

N.T.S.

NOTES:

1) THIS DRAWING IS NOT INTENDED TO SHOW REINFORCEMENT DESIGN EITHER AS TO PLACEMENT OR STEEL AREA. ACTUAL PROJECT SPECIFIACTIONS WILL GOVERN.

2) STEEL AREA IN WYE CONNECTION EXCEEDS THAT REQUIRED IN ADJACENT PIPE.

3) FOR 18" DIA. TO 30" DIA. MAINLINE R.C.P. THE DIA. OF THE WYE NEEDS TO BE 6" SMALLER THAN THE MAINLINE DIA. FOR 36" DIA. TO 96" DIA. MAINLINE R.C.P. THE DIA. OF THE WYE NEEDS TO BE 12" SMALLER THAN THE MAINLINE DIA.

TITLE 19 - SUBDIVISION ORDINANCE

ENGINEERING DEPARTMENT

DESIGN STANDARDS
FOR CONSTRUCTION

PRE-FABRICATED
REINFORCED CONCRETE
PIPE WYE
2-27

Approved By R. A. SHUBERT	Checked By H. M. E.
Date JUNE 03, 2008	Drawn By QEC / J. R.

STANDARD MANHOLE SPECIFICATIONS

1. THE PRECAST MANHOLE RISER AND CONICAL SECTIONS SHALL CONFORM TO ASTM SPECIFICATIONS C-478.

2. THE PRECAST CONCRETE SHALL ATTAIN A MINIMUM ALLOWABLE COMPRESSIVE STRENGTH OF 4000 PSI @ 28 DAYS.

3. THE CONCRETE BASE SHALL ATTAIN A MINIMUM ALLOWABLE COMPRESSIVE STRENGTH OF 3000 PSI @ 28 DAYS.

4. MASONRY SHALL BE COMMON BRICK WITH ASTM TYPE 'S' MORTAR ATTAINING A MINIMUM COMPRESSIVE STRENGTH OF 1800 P.S.I. AT 28 DAYS.

5. INCLUDE DETAIL FOR CONNECTION AT PRECAST JUNCTION BOXES OR EXISTING MANHOLES (IF APPLICABLE) , REFER TO PLATE 2-26.

6. MANHOLE COVER SHALL BE SET FLUSH WITH FINISHED PAVEMENT.

7. SUBGRADE FOR MANHOLES SHALL BE COMPACTED TO A MINIMUM OF 95% IN ACCORDANCE WITH ASTM D1557.

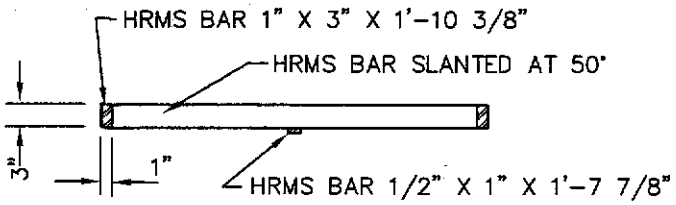

C GRATE SECTION

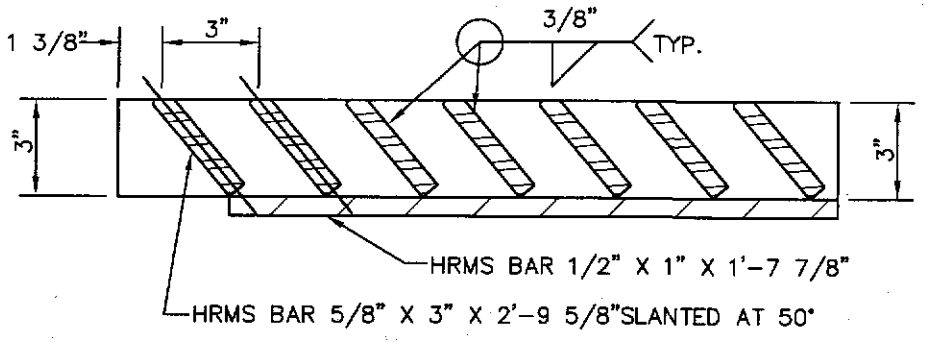

B GRATE SECTION

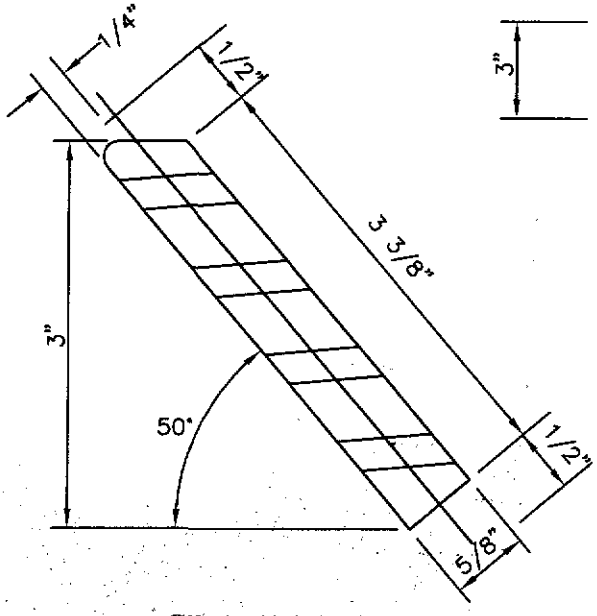

SLANTED BAR DETAIL

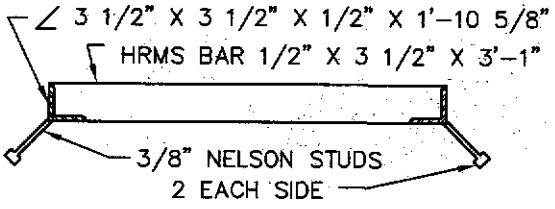

A FRAME SECTION

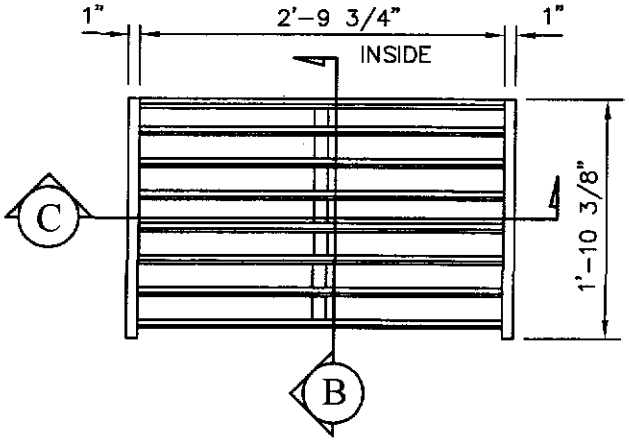

GRATE

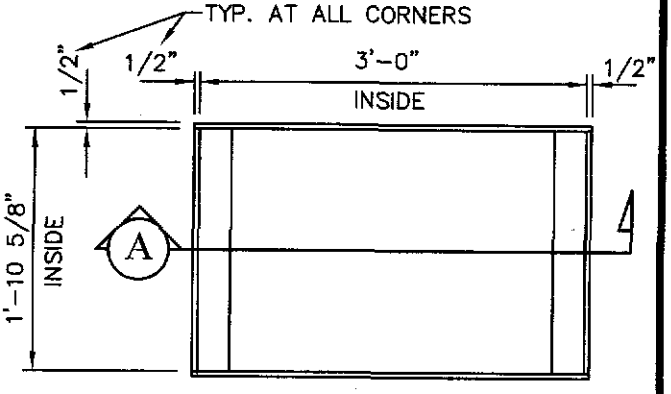

FRAME

TITLE 19 - SUBDIVISION ORDINANCE

ENGINEERING DEPARTMENT

DESIGN STANDARDS FOR CONSTRUCTION

GRATE AND FRAME FOR DROP INLET

2-29

Approved By R. A. SHUBERT
Date JUNE 03, 2008

Checked By H. M. E.
Drawn By QEC / J. R.

TITLE 19 - SUBDIVISION ORDINANCE

ENGINEERING DEPARTMENT

DESIGN STANDARDS FOR CONSTRUCTION

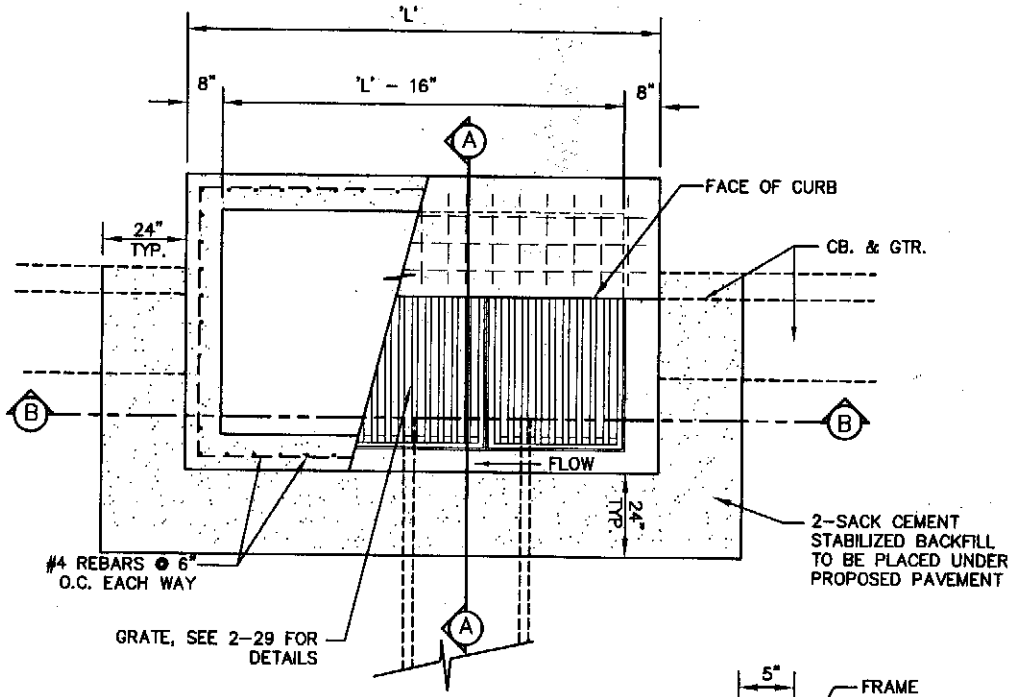

PLAN VIEW

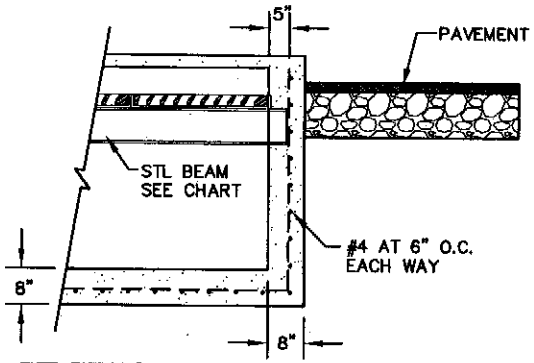

SECTION B

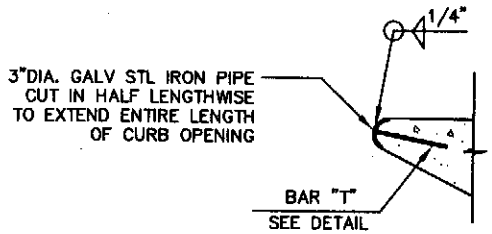

DETAIL "B"

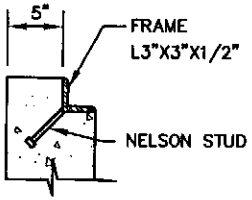

DETAIL "C"

NOTES
1. H = 20' MAXIMUM
2. CONCRETE TO BE 3000 psi MIN CORE TEST @ 28 DAYS.
3. GRATE TO BE PERPENDICULAR TO TRAFFIC.

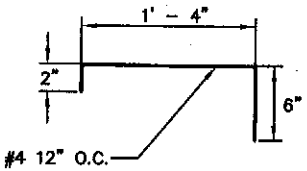

BAR "T"

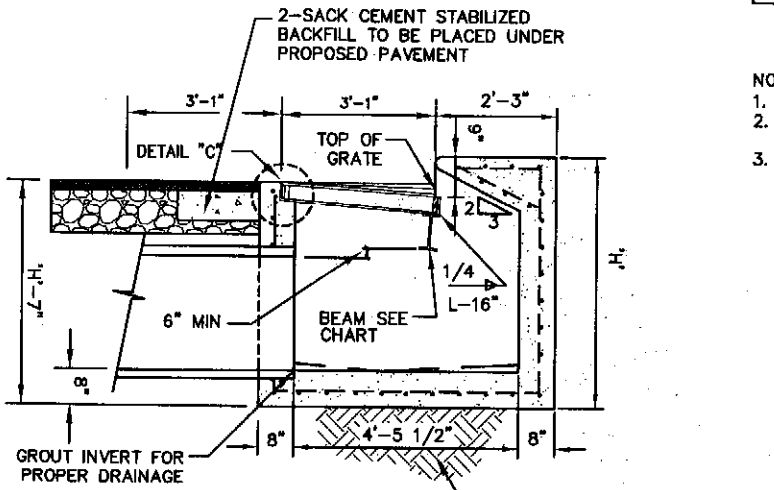

SECTION A

NO. OF GRATES	'L'	BEAM	
		LENGTH	MINIMUM SIZES
2	5'-1 1/8"	4'-7 1/8"	W6X12, S6X12.5, MC6X15.1
3	7'-0 1/4"	6'-5 1/8"	W8X15, S7X15.3, MC7X17.6
4	8'-9 7/8"	8'-3 7/8"	W9X18, S8X18.4, MC10X21.9
5	10'-8"	10'-2"	W12X16, S8X21, MC10X21.9
6	12'-6 5/8"	12'-0 5/8"	W12X19, S8X23, MC10X25

DROP INLET
TYPE I
2-30

Approved By R. A. SHUBERT
Date JUNE 03, 2008

Checked By H. M. E.
Drawn By QEC / I. R.

TITLE 19 - SUBDIVISION ORDINANCE

ENGINEERING DEPARTMENT

DESIGN STANDARDS FOR CONSTRUCTION

NUMBER OF GRATES	'L'
2	7'-1"
3	10'-2"
4	13'-3"
5	16'-4"

NOTES
1. H = 20' MAXIMUM
2. CONCRETE TO BE 3000 psi MIN CORE TEST @ 28 DAYS.
3. GRATE TO BE PERPENDICULAR TO TRAFFIC.

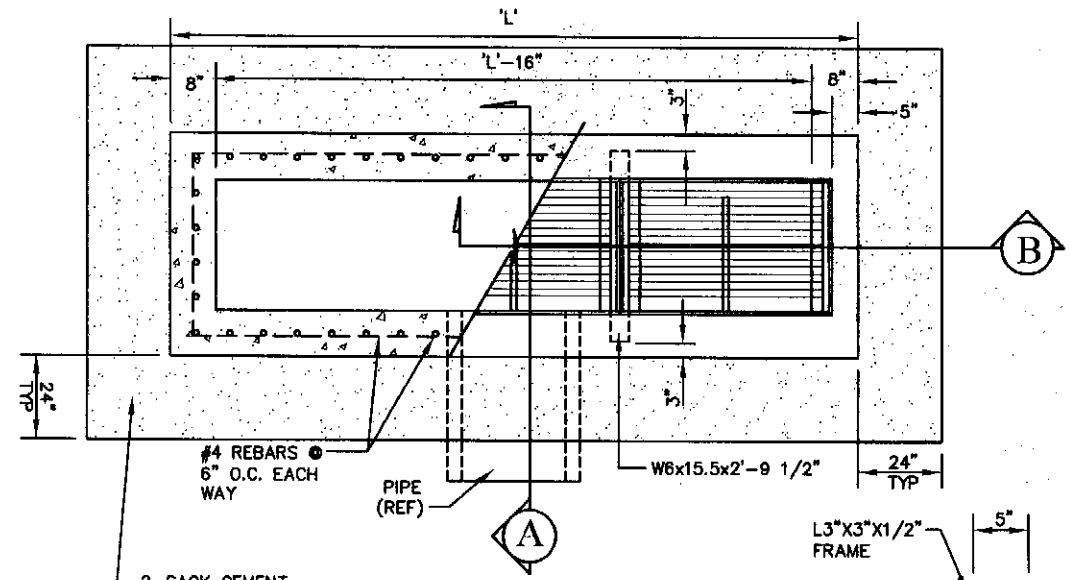

PLAN VIEW
NTS

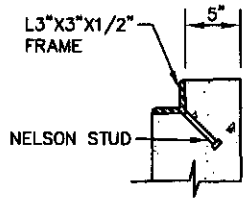

DETAIL "C"

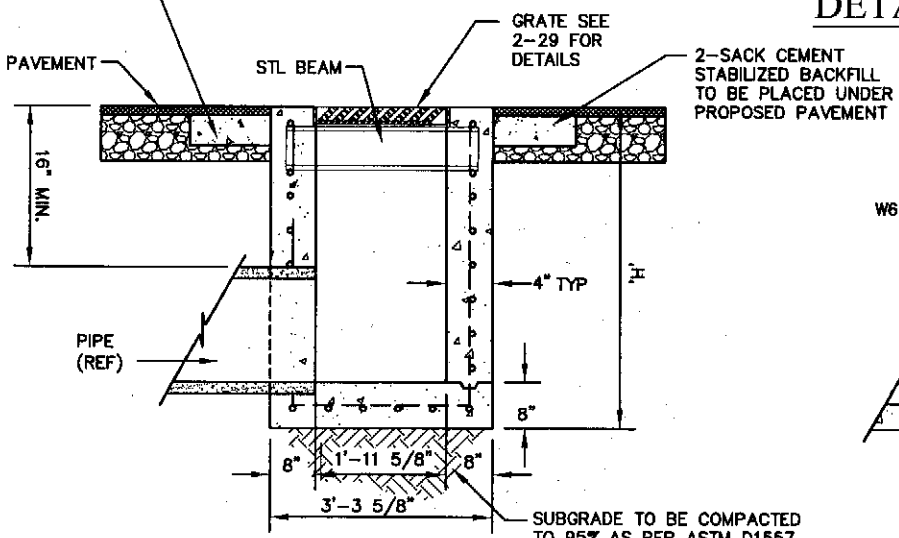

SECTION A
NTS

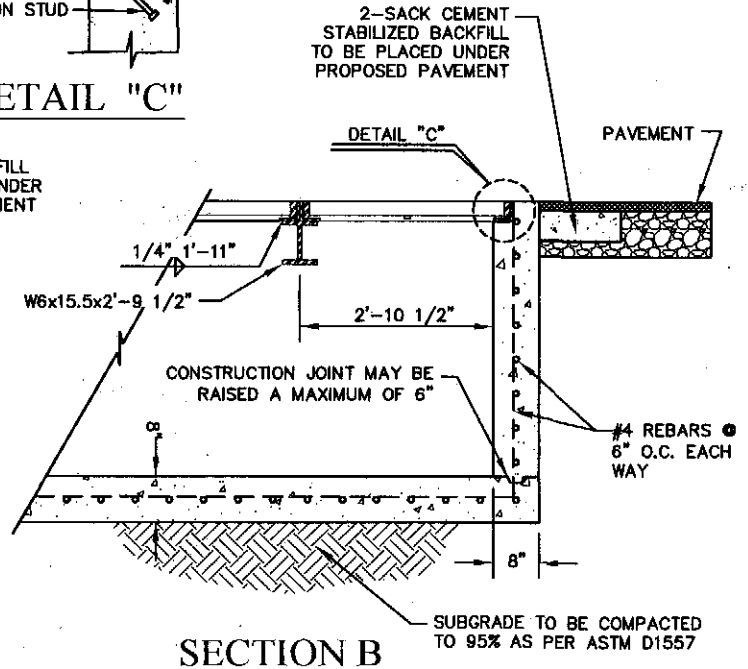

SECTION B
NTS

DROP INLET
TYPE II
2-31

Approved By R. A. SHUBERT
Date JUNE 03, 2008
Checked By H. M. E.
Drawn By QEC / J. R.

TITLE 19 - SUBDIVISION ORDINANCE

ENGINEERING DEPARTMENT

DESIGN STANDARDS FOR CONSTRUCTION

NUMBER OF GRATES	'L'
2	5'-1 1/8"
3	7'-0 1/8"
4	8'-9 7/8"
5	10'-8"

NOTES
1. H = 20' MAXIMUM
2. CONCRETE TO BE 3000 psi MIN CORE TEST @ 28 DAYS.
3. GRATE TO BE PERPENDICULAR TO TRAFFIC.

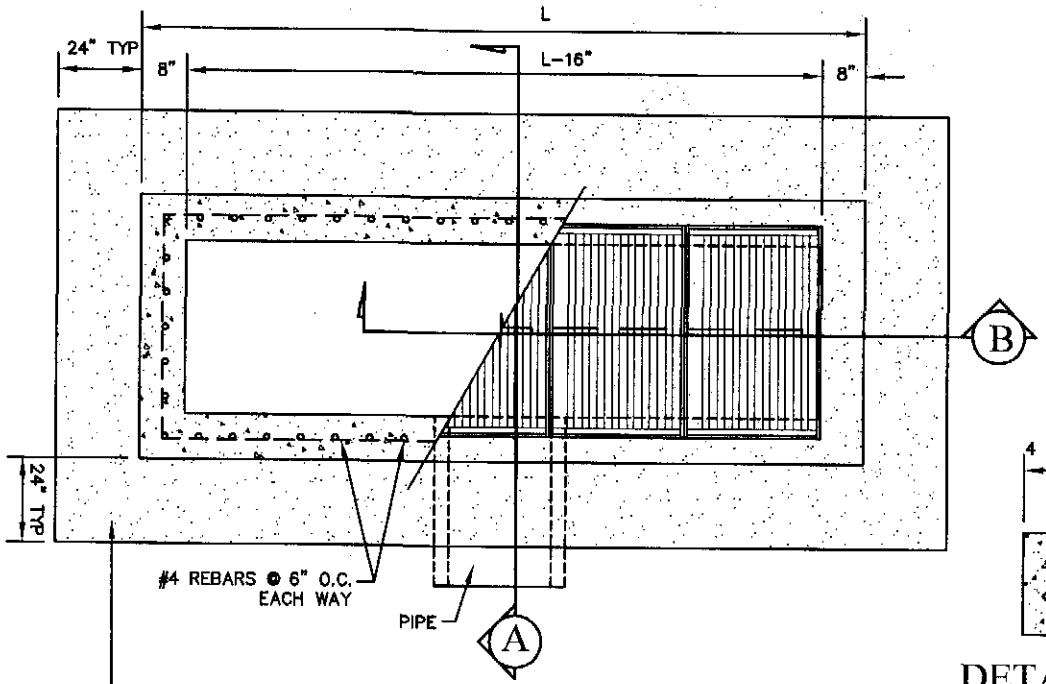

PLAN VIEW
NTS

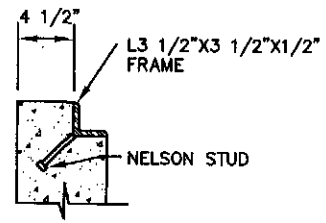

DETAIL "C"

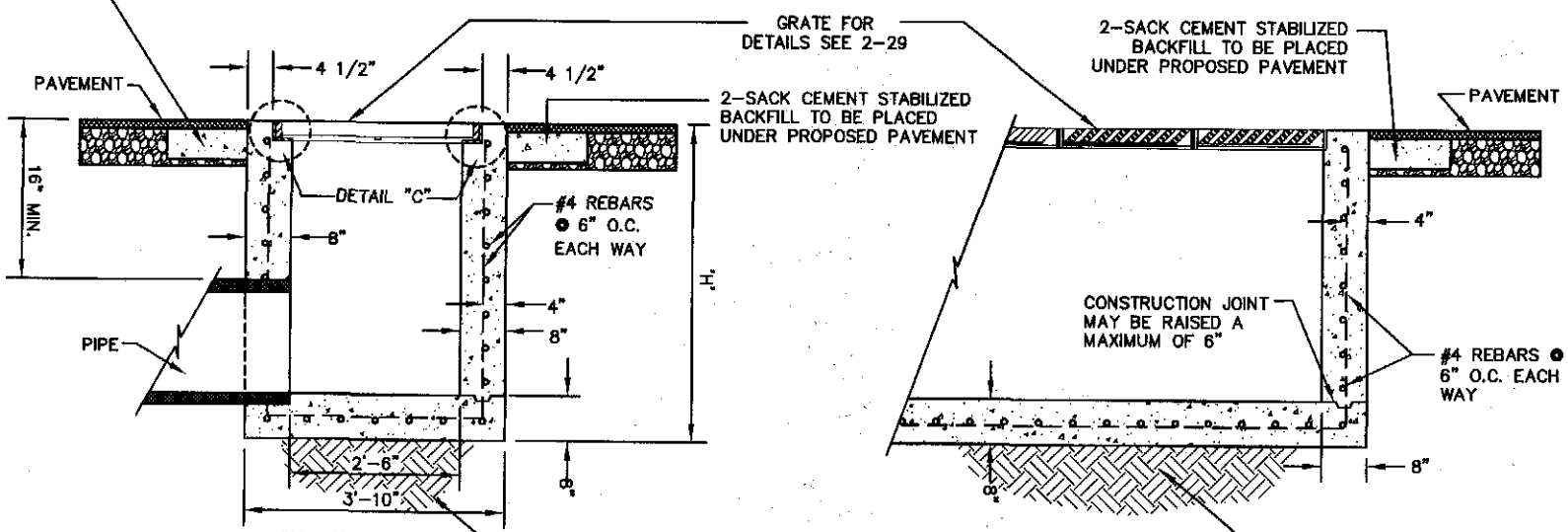

SECTION A
NTS

SECTION B
NTS

DROP INLET TYPE III

2-32

Approved By R. A. SHUBERT
Date JUNE 03, 2008
Checked By H. M. E.
Drawn By QEC / J. R.

TITLE 19 - SUBDIVISION ORDINANCE

ENGINEERING DEPARTMENT

DESIGN STANDARDS FOR CONSTRUCTION

NUMBER OF GRATES	'L'
1	2'-11 5/8"
2	5'- 3/4"
3	6'-10 3/4"
4	8'-9 1/2"
5	10'-8"

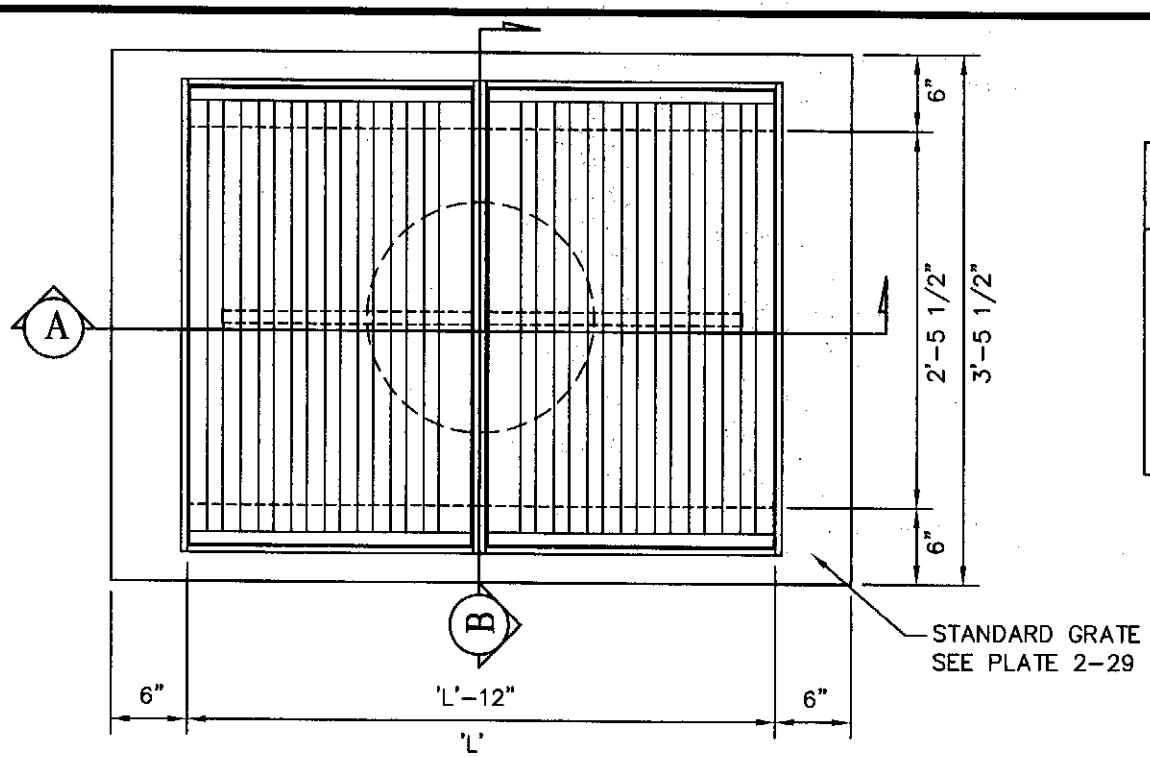

PLAN
NTS

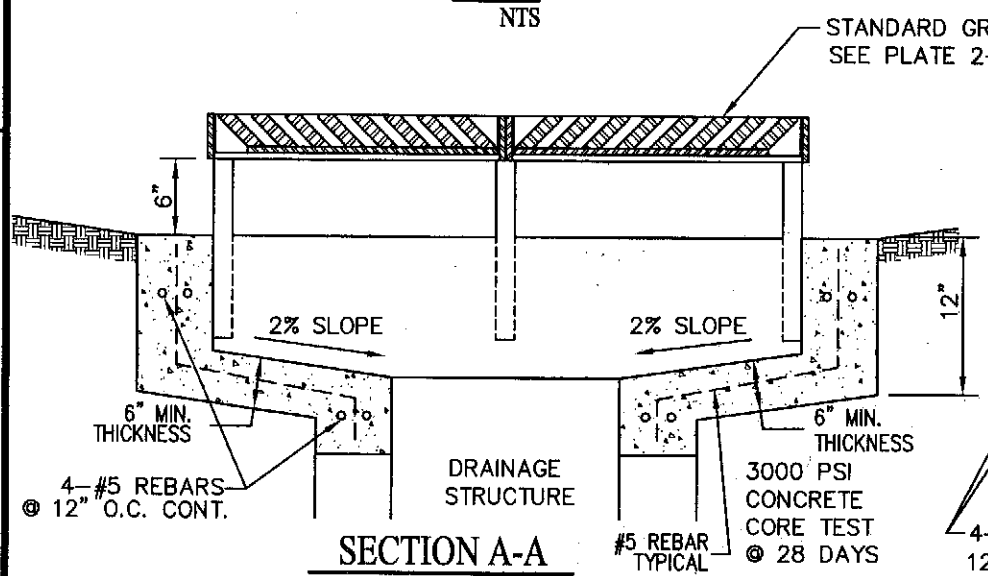

SECTION A-A
NTS

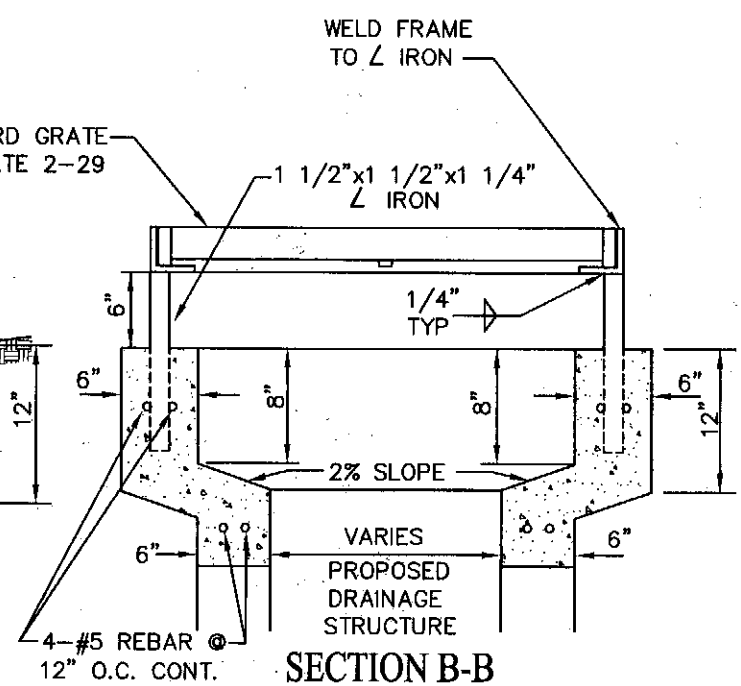

SECTION B-B
NTS

OFF- STREET STORM INLET DETAIL
2-33

Approved By R. A. SHUBERT
Date JUNE 03, 2008
Checked By H. M. E.
Drawn By QEC / J. R.

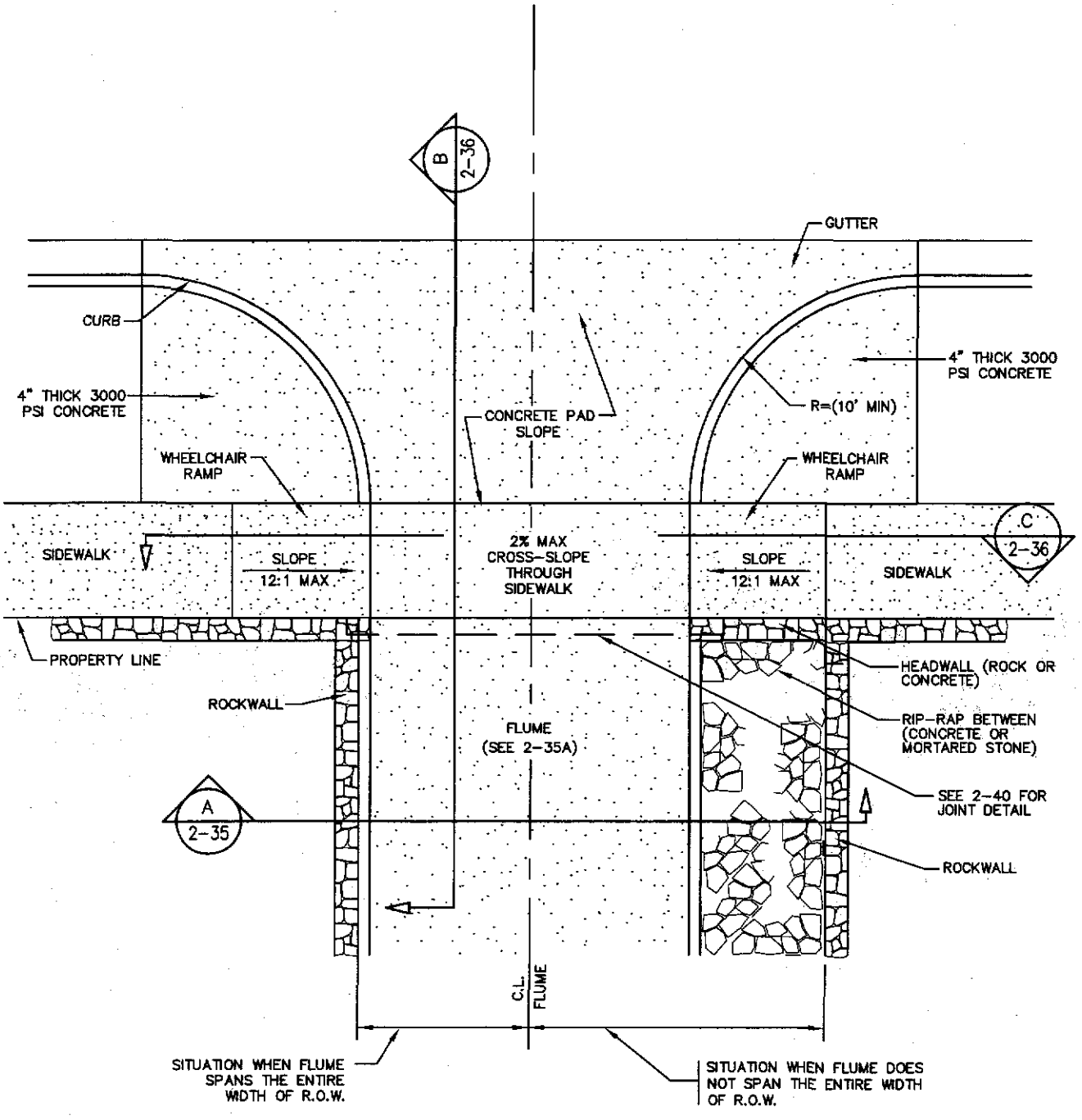

TITLE 19 - SUBDIVISION ORDINANCE

ENGINEERING DEPARTMENT

DESIGN STANDARDS FOR CONSTRUCTION

FLUME DESIGN
2-34

Approved By R. A. SHUBERT	Checked By H. M. E.
Date JUNE 03, 2008	Drawn By QEC / J. R.

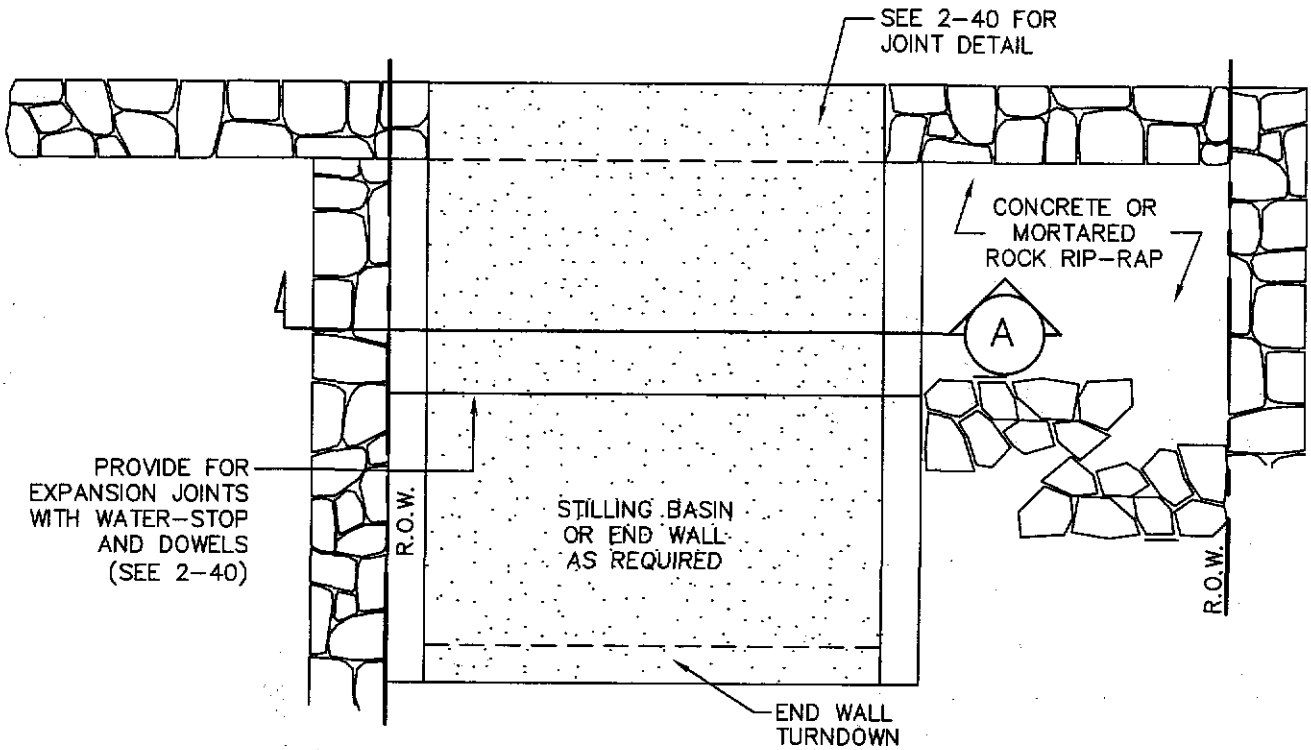

PLAN VIEW
NTS

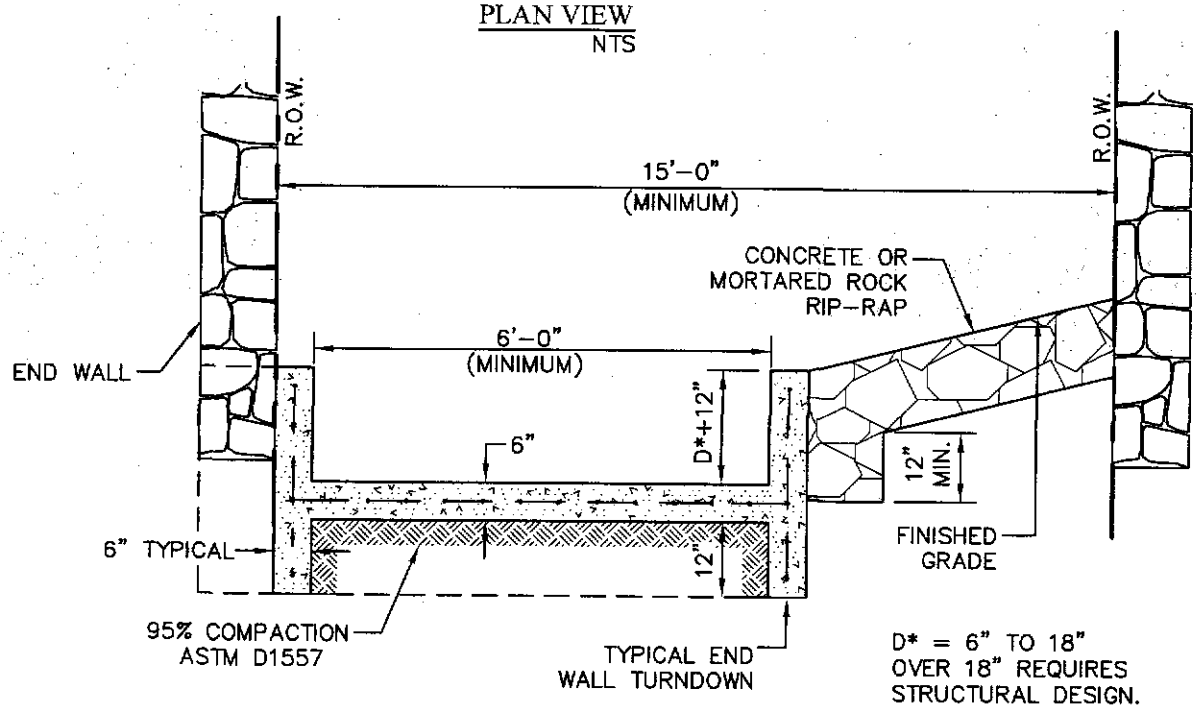

SECTION - A
NTS

D* = 6" TO 18"
OVER 18" REQUIRES STRUCTURAL DESIGN.
FREEBOARD 12" MIN REQUIRED. 3000 PSI CORE TEST @ 28 DAYS.

TITLE 19 - SUBDIVISION ORDINANCE

ENGINEERING DEPARTMENT

DESIGN STANDARDS FOR CONSTRUCTION

CONCRETE FLUME WITHIN DRAINAGE R.O.W.
2-35A

Approved By R. A. SHUBERT	Checked By H. M. E.
Date JUNE 03, 2008	Drawn By QEC / J. R.

NOTES:
1. ALL CONCRETE SHALL BE 3000 PSI COMPRESSIVE STRENGTH @ 28 DAYS.

2. STEEL DIAMOND FLOOR PLATE TO HAVE A MINIMUM OF TWO COATS OF RED OXIDE PRIMER.

3. PLATE COLOR AS SPECIFIED.

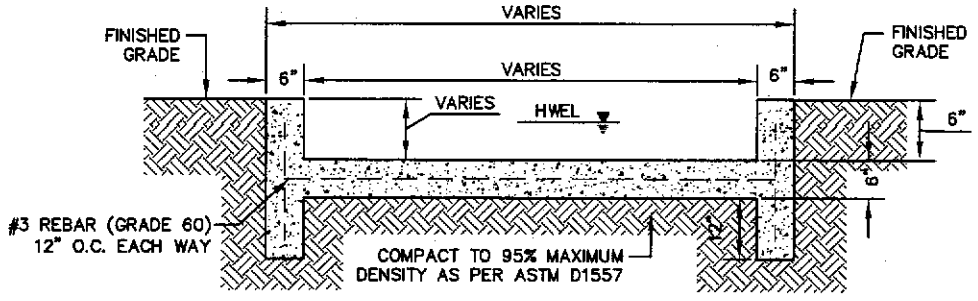

CONCRETE FLUME SECTION WITHOUT PLATE

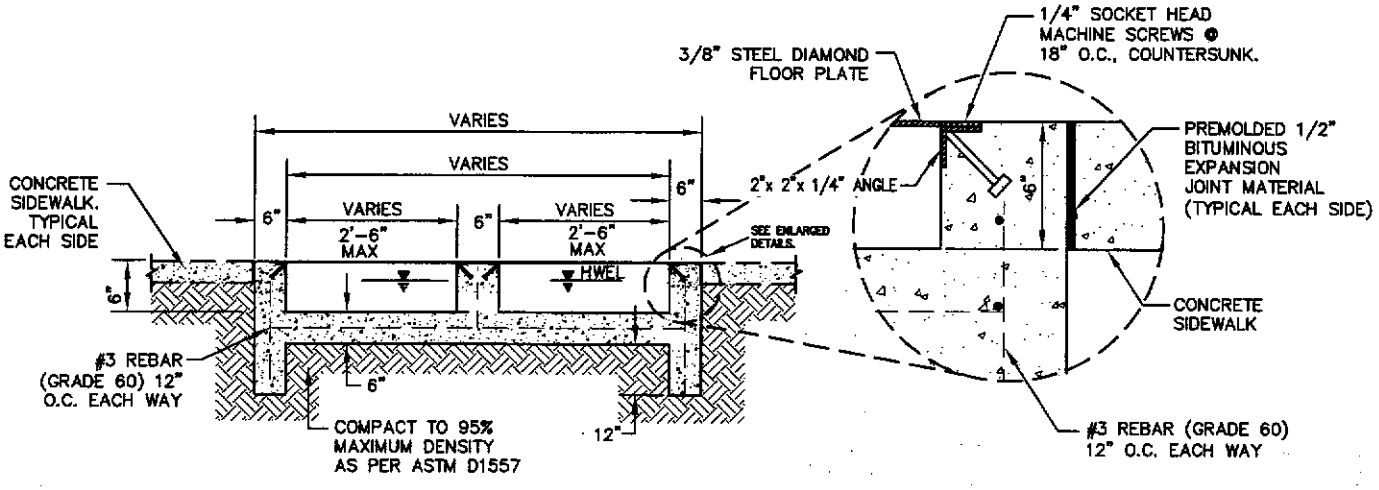

MULTIPLE CONCRETE FLUMES WITH STEEL PLATE COVER

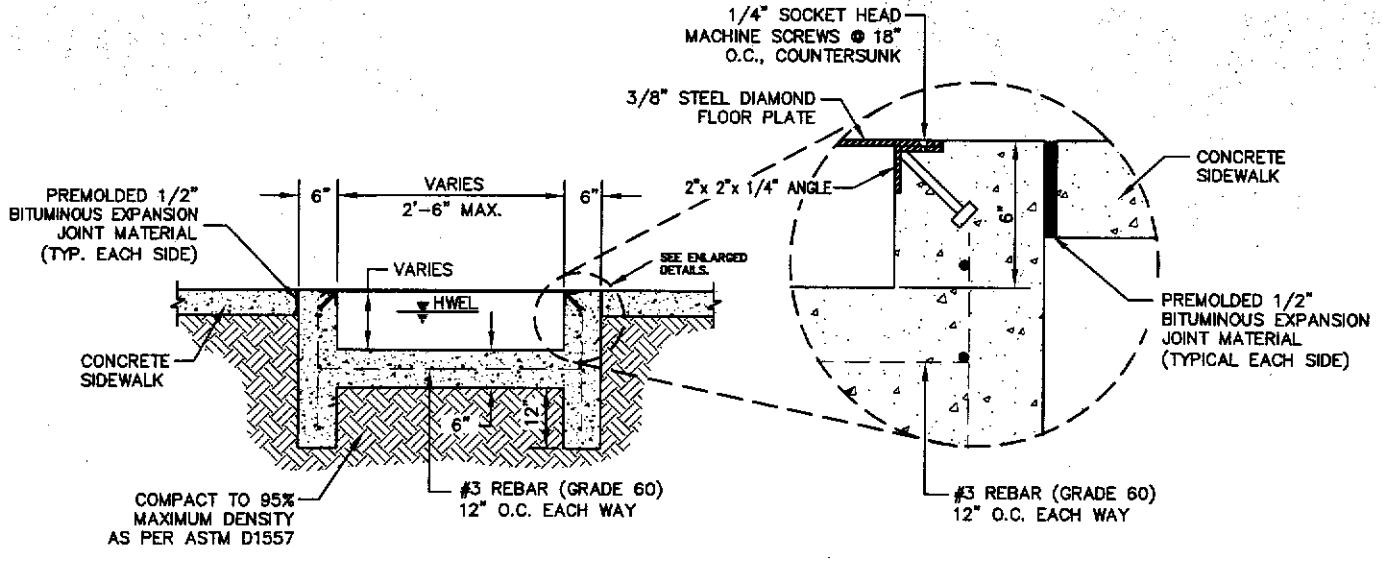

CONCRETE FLUME WITH STEEL PLATE COVER

TITLE 19 - SUBDIVISION ORDINANCE

ENGINEERING DEPARTMENT

DESIGN STANDARDS FOR CONSTRUCTION

TYPICAL CONCRETE DRAINAGE FLUMES

2-35B

Approved By R. A. SHUBERT	Checked By H. M. E.
Date JUNE 03, 2008	Drawn By QEC / J. R.

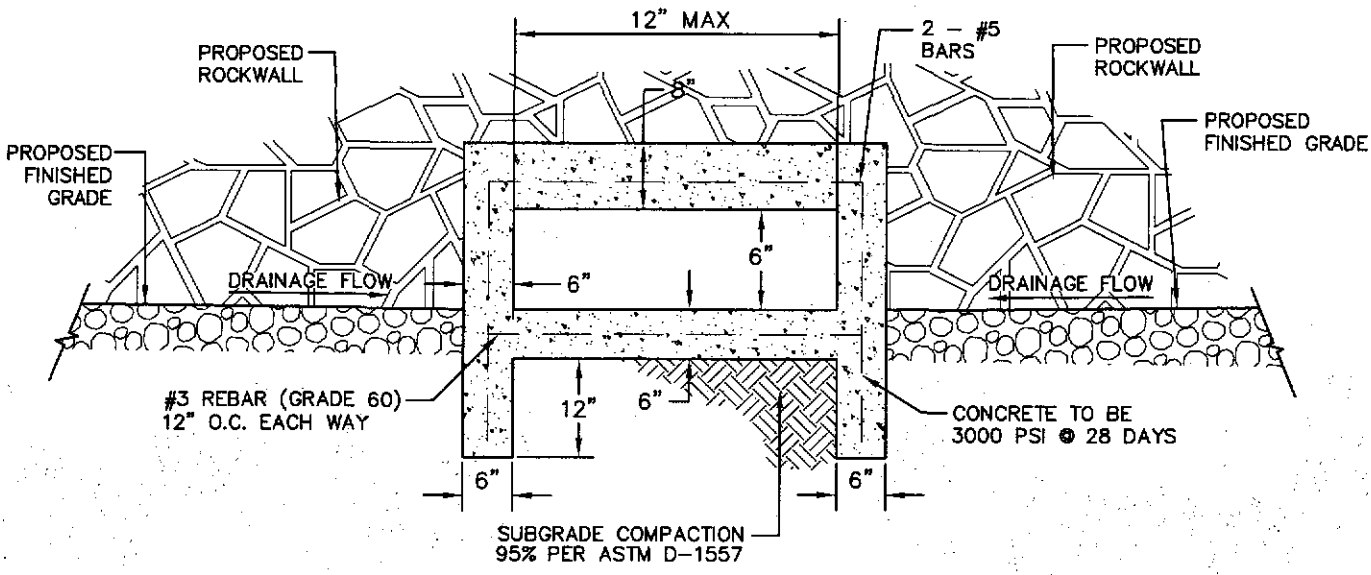

NOTE: FOR OPENINGS WIDER THAN 12", DESIGN ENGINEER SHALL SUBMIT STRUCTURAL DESIGN CALCULATIONS TO BE SUBMITTED AND APPROVED BY THE CITY ENGINEER. WIDER OPENINGS SHALL INCLUDE INTERMEDIATE VERTICAL CONCRETE SUPPORTS AND SAFETY PIPE/GRATING WHERE APPROPRIATE.

SMALL WALL OPENING FOR DRAINAGE

SCALE: NTS

TITLE 19 - SUBDIVISION ORDINANCE

ENGINEERING DEPARTMENT

DESIGN STANDARDS FOR CONSTRUCTION

SMALL WALL OPENING FOR DRAINAGE

2-35C

Approved By R. A. SHUBERT	Checked By H. M. E.
Date JUNE 03, 2008	Drawn By QEC / J. R.

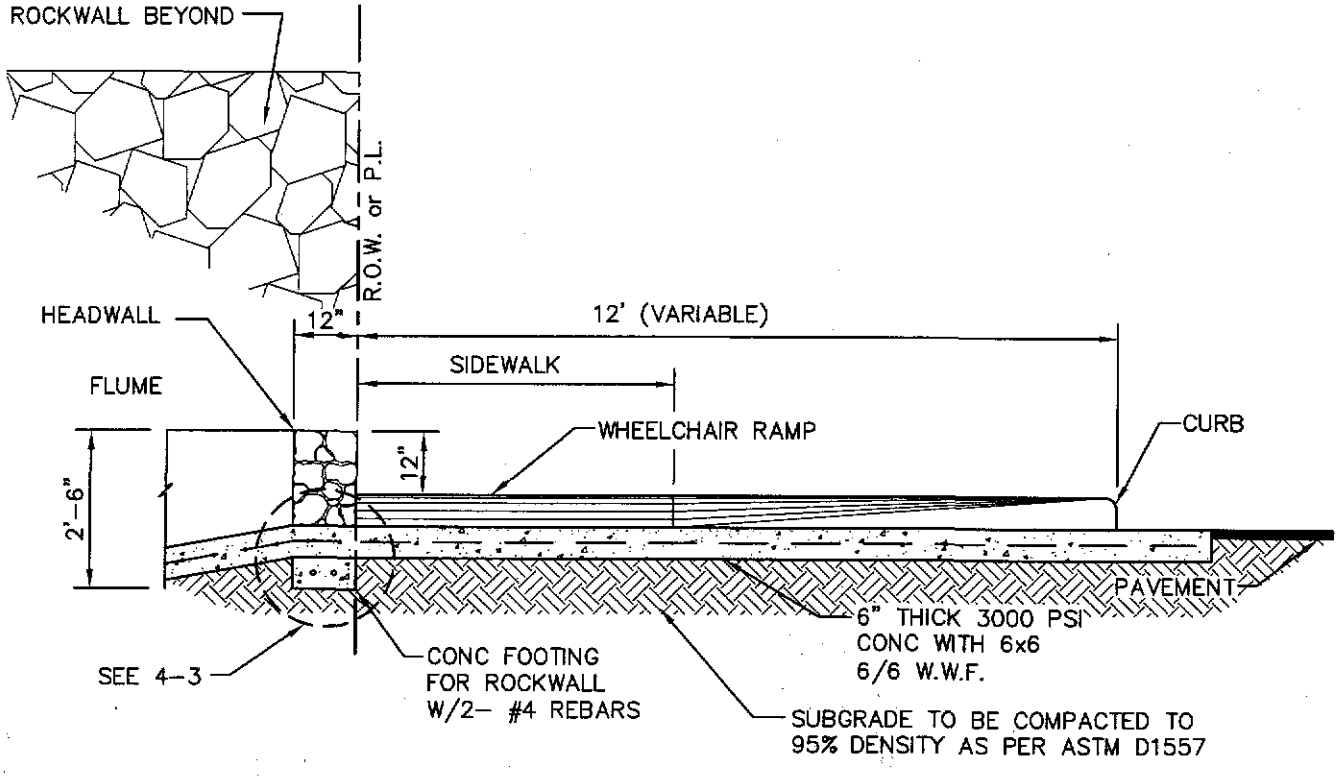

SECTION - B

NTS

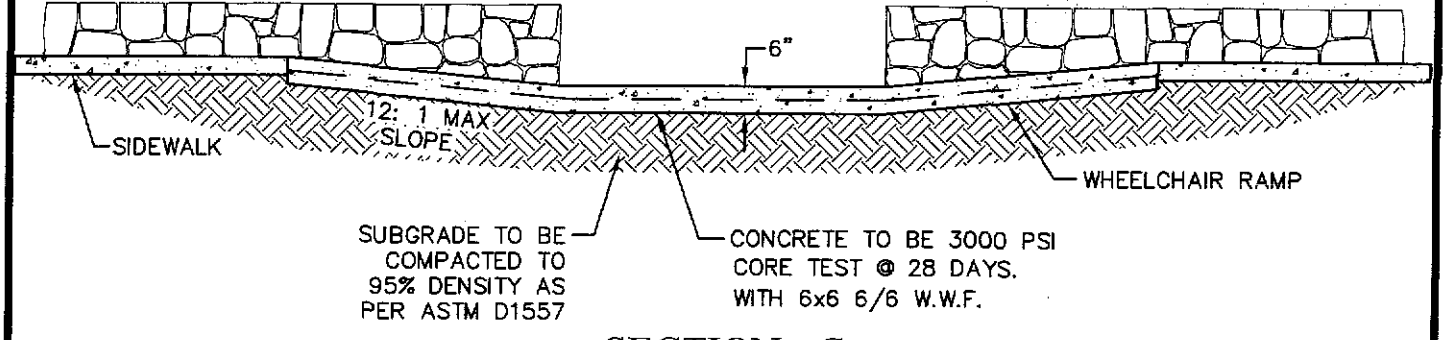

SECTION - C

NTS

TITLE 19 - SUBDIVISION ORDINANCE

ENGINEERING DEPARTMENT

DESIGN STANDARDS
FOR CONSTRUCTION

FLUME DESIGN
SECTION

2-36

Approved By R. A. SHUBERT	Checked By H. M. E.
Date JUNE 03, 2008	Drawn By QEC / J. R.

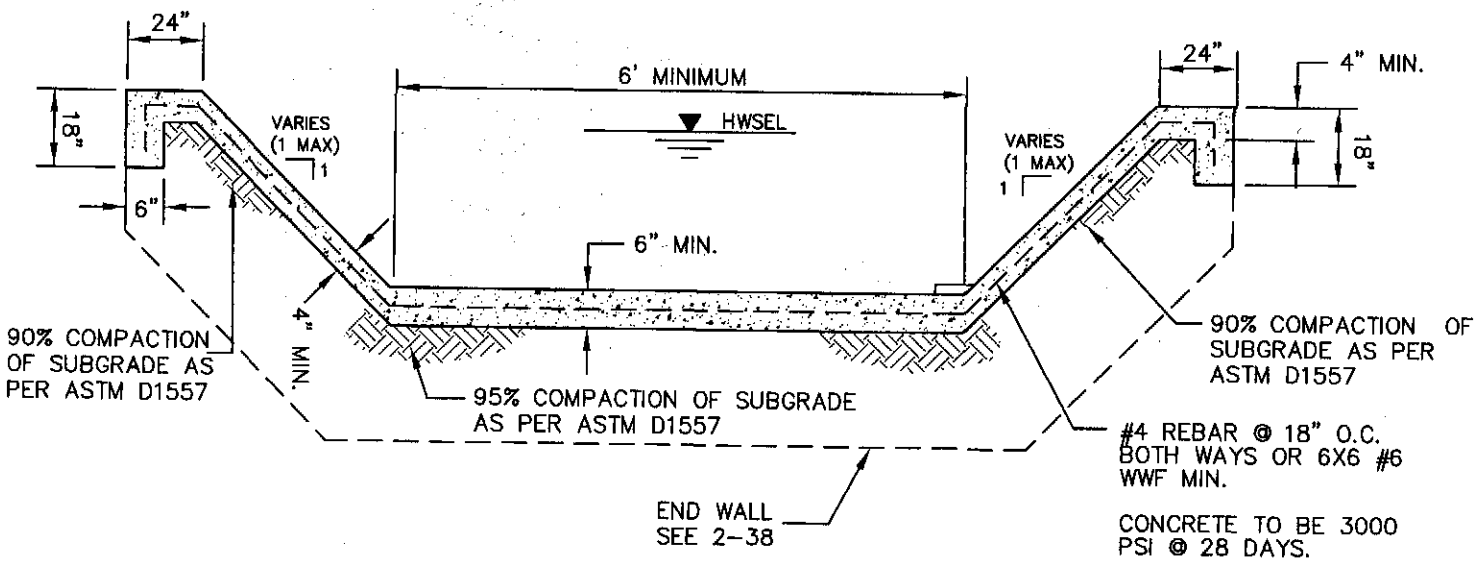

NOTE:

1. TYPE I SPECIFIED WHEN TOP OF CHANNEL IS EVEN WITH GROUND.
2. CHANNEL SECTIONS SHALL BE POURED MONOLITHICALLY FROM TOP OF SLOPE TO TOP OF SLOPE
3. SEE DRAINAGE DESIGN MANUAL, JUNE 2008 (SEC. 8.2.5) FOR REQUIRED FREEBOARD FOR SUBCRITICAL OR SUPERCRITICAL FLOWS.

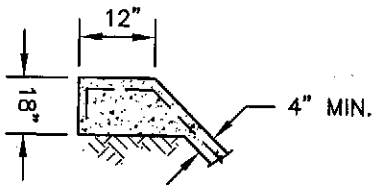

ALTERNATE WING WALL DETAIL

CONCRETE CHANNEL TYPE I

TITLE 19 - SUBDIVISION ORDINANCE

ENGINEERING DEPARTMENT

DESIGN STANDARDS FOR CONSTRUCTION

CONCRETE CHANNEL TYPE I

2-37

Approved By R.A. SHUBERT
Date JUNE 03, 2008

Checked By H.M.E.
Drawn By QEC / J.R.

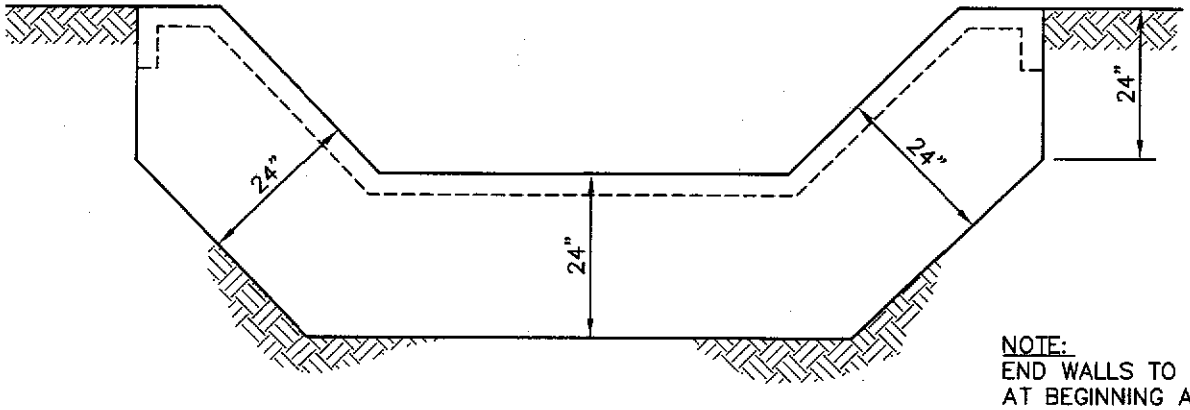

NOTE:
END WALLS TO BE PLACED AT BEGINNING AND END OF CONCRETE CHANNELS.

END WALL ELEVATION

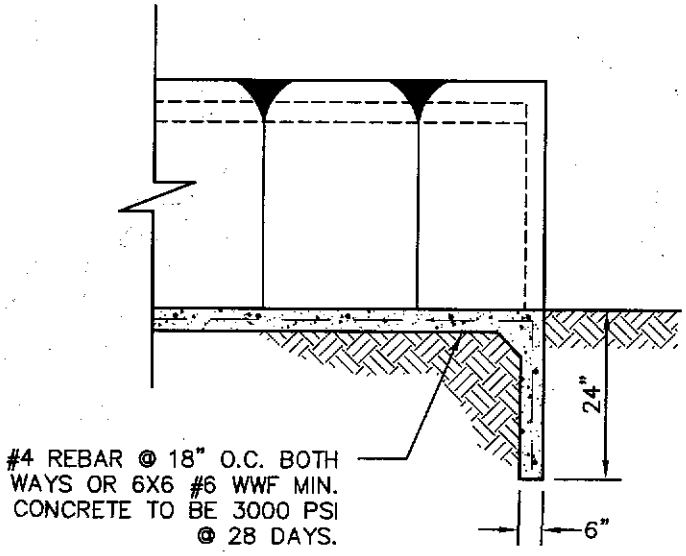

END WALL SECTIONAL VIEW

TITLE 19 - SUBDIVISION ORDINANCE

ENGINEERING DEPARTMENT

DESIGN STANDARDS FOR CONSTRUCTION

CONCRETE CHANNEL
TYPE I
END WALL DETAIL
2-38

Approved By R. A. SHUBERT	Checked By H. M. E.
Date JUNE 03, 2008	Drawn By QEC / J. R.

NOTES:

1. CONCRETE LINING INVERT MUST MATCH MAINTENANCE GRADE AND WIDTH OF CHANNEL.
2. CONCRETE LINING SHALL BE PLACED 5' UPSTREAM AND 15' DOWNSTREAM OF LINE OF DIS-CHARGE PIPE (48" MAXIMUM).
3. ALL CONCRETE TO BE 3000 PSI @ 28 DAYS.
4. CHANNEL SECTIONS SHALL BE POURED MONOLITHICALLY FROM TOP OF SLOPE TO TOP OF SLOPE

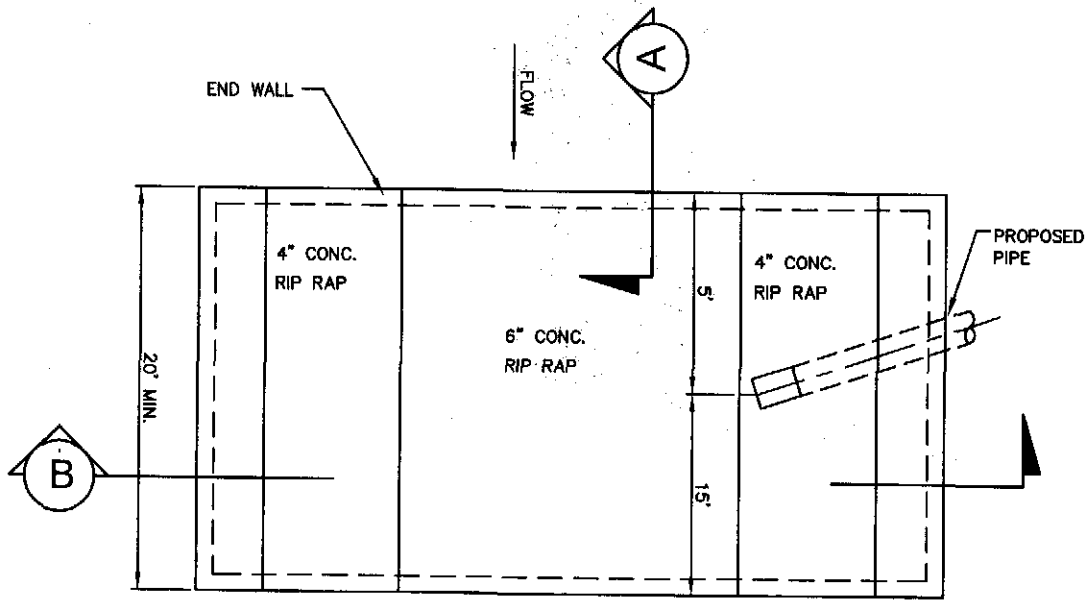

PLAN VIEW

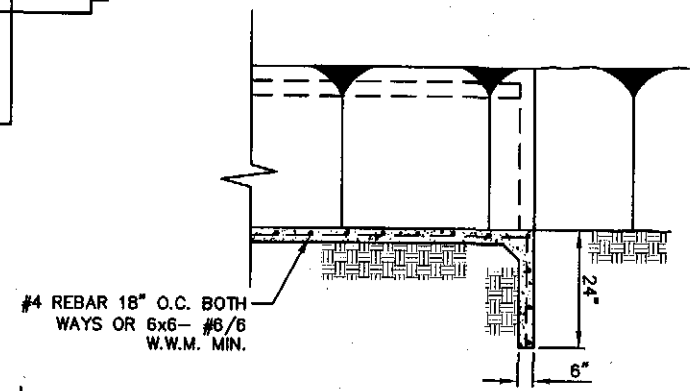

A SECTION

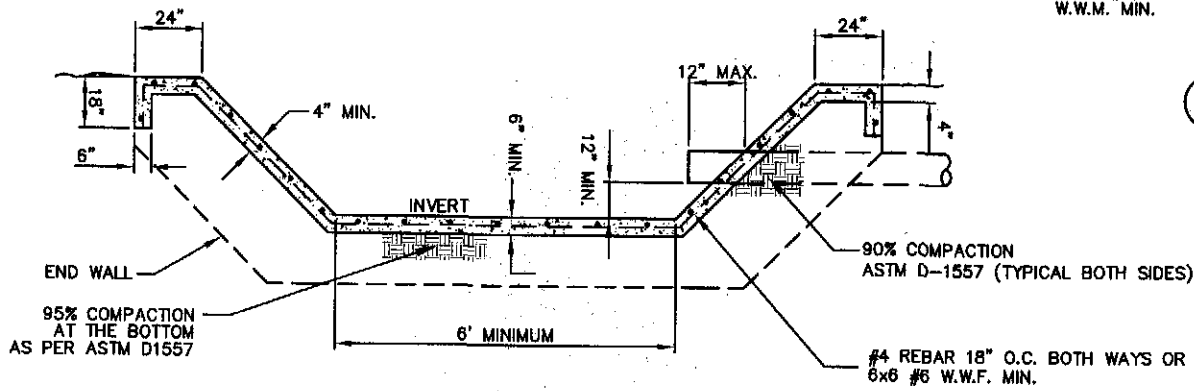

B SECTION

TITLE 19 - SUBDIVISION ORDINANCE

ENGINEERING DEPARTMENT

DESIGN STANDARDS
FOR CONSTRUCTION

CHANNEL LINING AT
PIPE DISCHARGE

2-39

Approved By R. A. SHUBERT
Date JUNE 03, 2008

Checked By H. M. E.
Drawn By QEC / J. R.

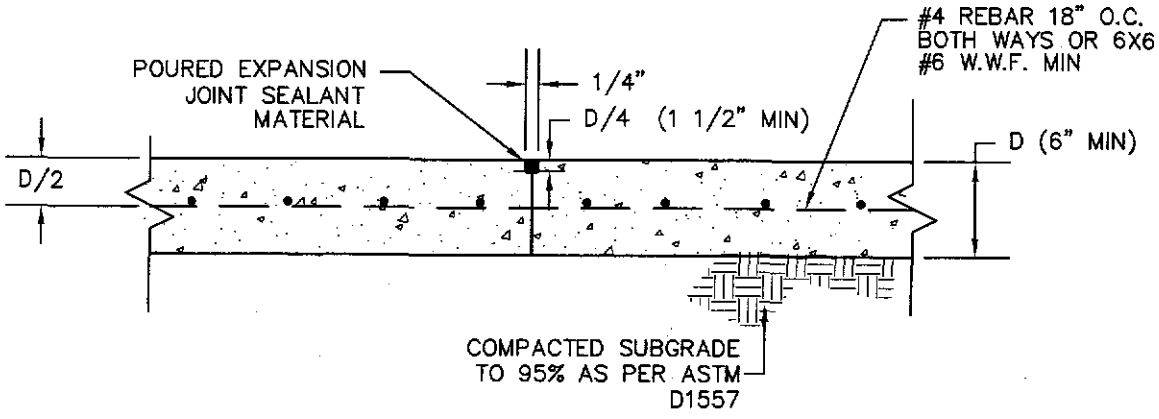

CONTRACTION JOINT AT 25' O.C.

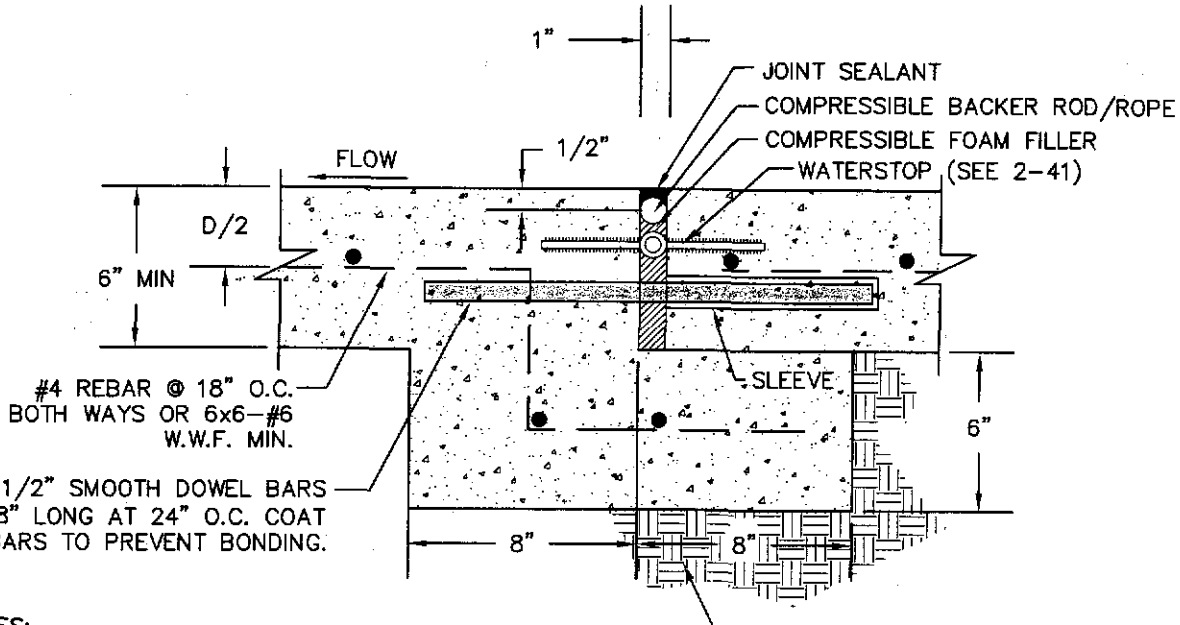

NOTES:

MAX. EXPANSION JOINT SPACING @ 100 FEET O.C. ALONG C.L. OF CHANNEL.

EXPANSION JOINT

TITLE 19 - SUBDIVISION ORDINANCE

ENGINEERING DEPARTMENT

DESIGN STANDARDS FOR CONSTRUCTION

CONCRETE JOINTS

2-40

Approved By R. A. SHUBERT	Checked By H. M. E.
Date JUNE 03, 2008	Drawn By QEC / J. R.

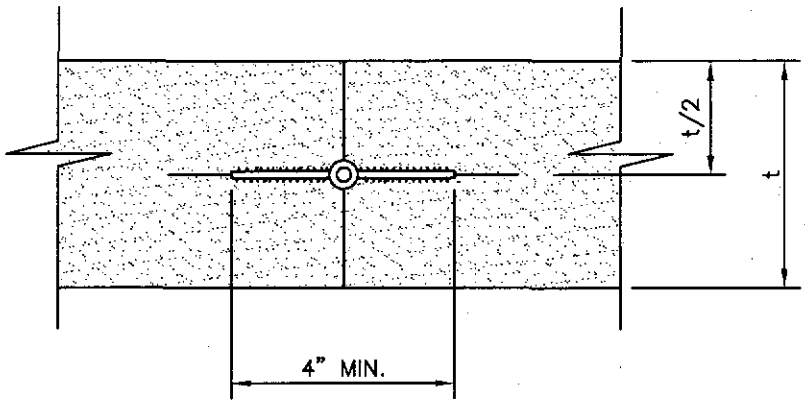

WATERSTOP DETAIL

NOTE:
WATERSTOP SHALL BE GREENSTREAK PVC MATERIAL, SPECIFICATIONS GRADE, 6" X 1/8" AND SERRATED WITH CENTERBULB OR APPROVED SUBSTITUTION BY CITY ENGINEER.

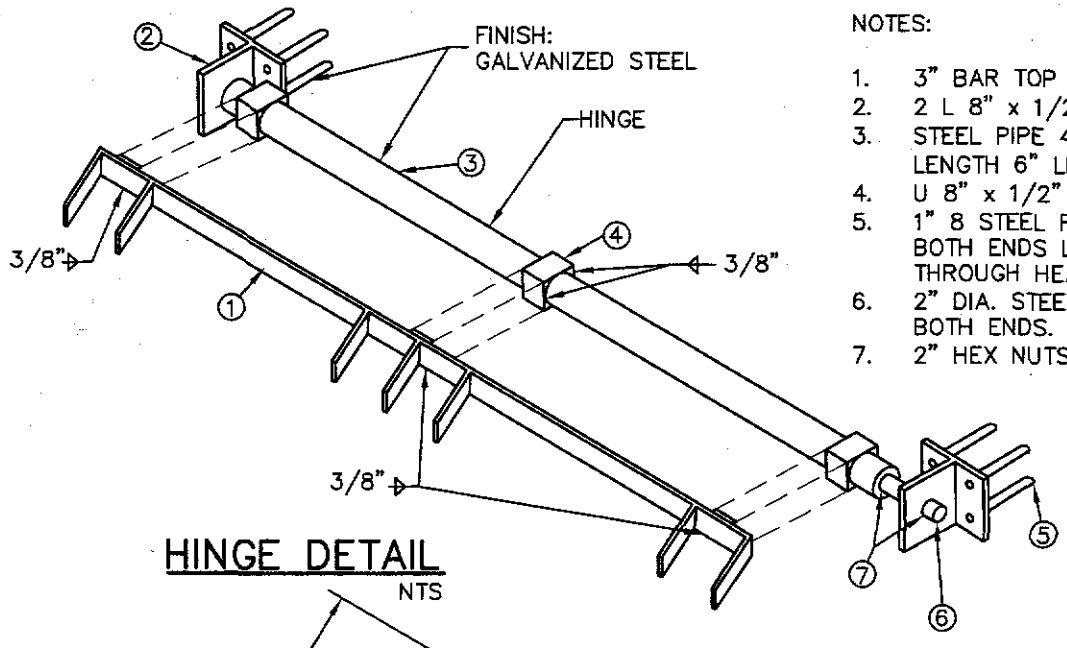

NOTES:

1. 3" BAR TOP OF RACK.
2. 2 L 8" x 1/2" x5"
3. STEEL PIPE 4" O.D. 2-1/2" I.D. LENGTH 6" LESS THEN ROD
4. U 8" x 1/2" x 5" x 3"
5. 1" 8 STEEL RODS THREADED BOTH ENDS LENGTH TO EXTEND THROUGH HEADWALL.
6. 2" DIA. STEEL ROD THREAD BOTH ENDS.
7. 2" HEX NUTS AND WASHERS.

HINGE DETAIL

NTS

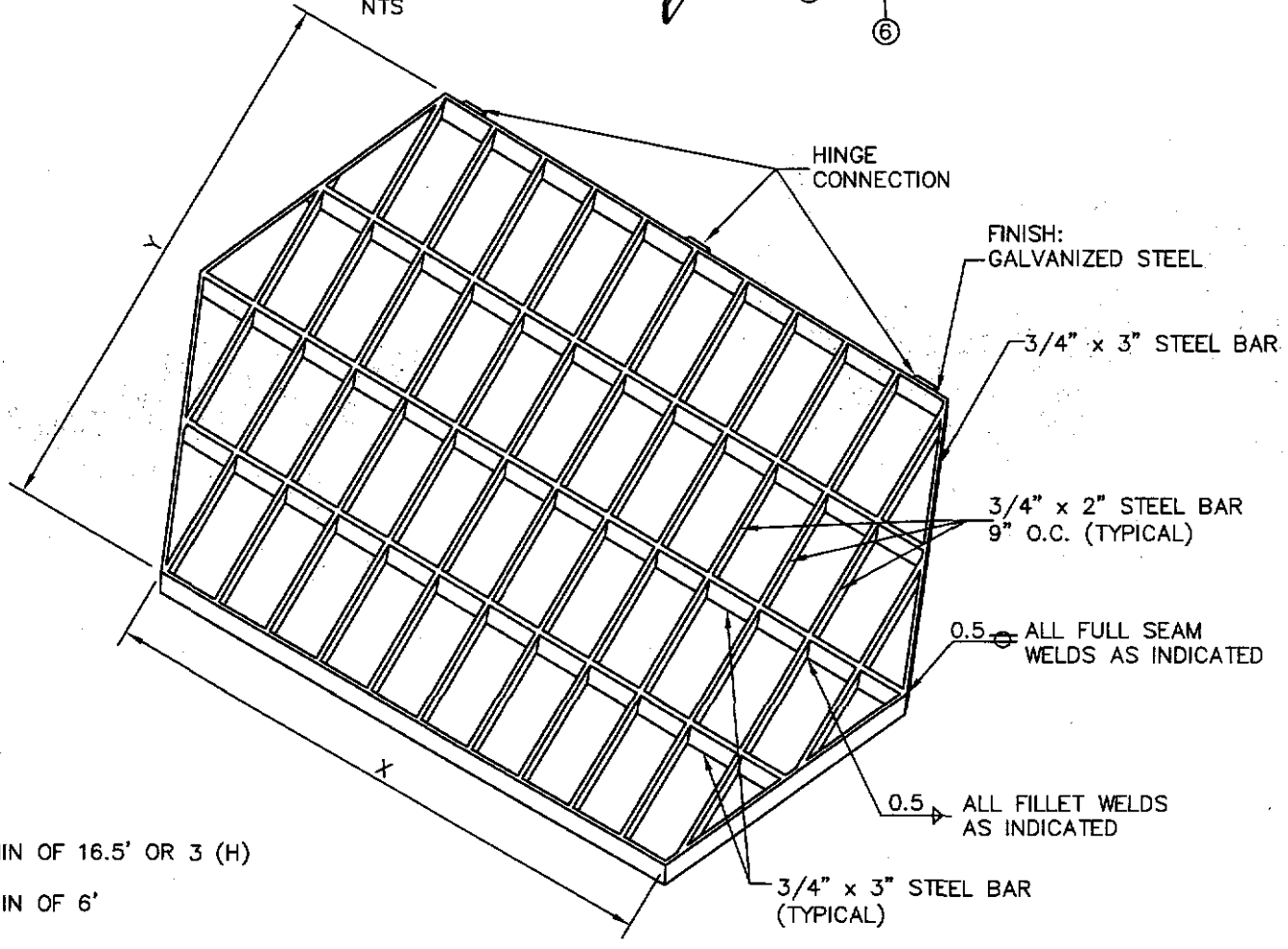

Y=MIN OF 16.5' OR 3 (H)

X=MIN OF 6'

DEBRIS TRAP DETAIL

NTS

TITLE 19 - SUBDIVISION ORDINANCE

ENGINEERING DEPARTMENT

DESIGN STANDARDS FOR CONSTRUCTION

DEBRIS TRAP/SAFETY GRATE

2-42

Approved By R. A. SHUBERT	Checked By H. M. E.
Date JUNE 03, 2008	Drawn By QEC / J. R.

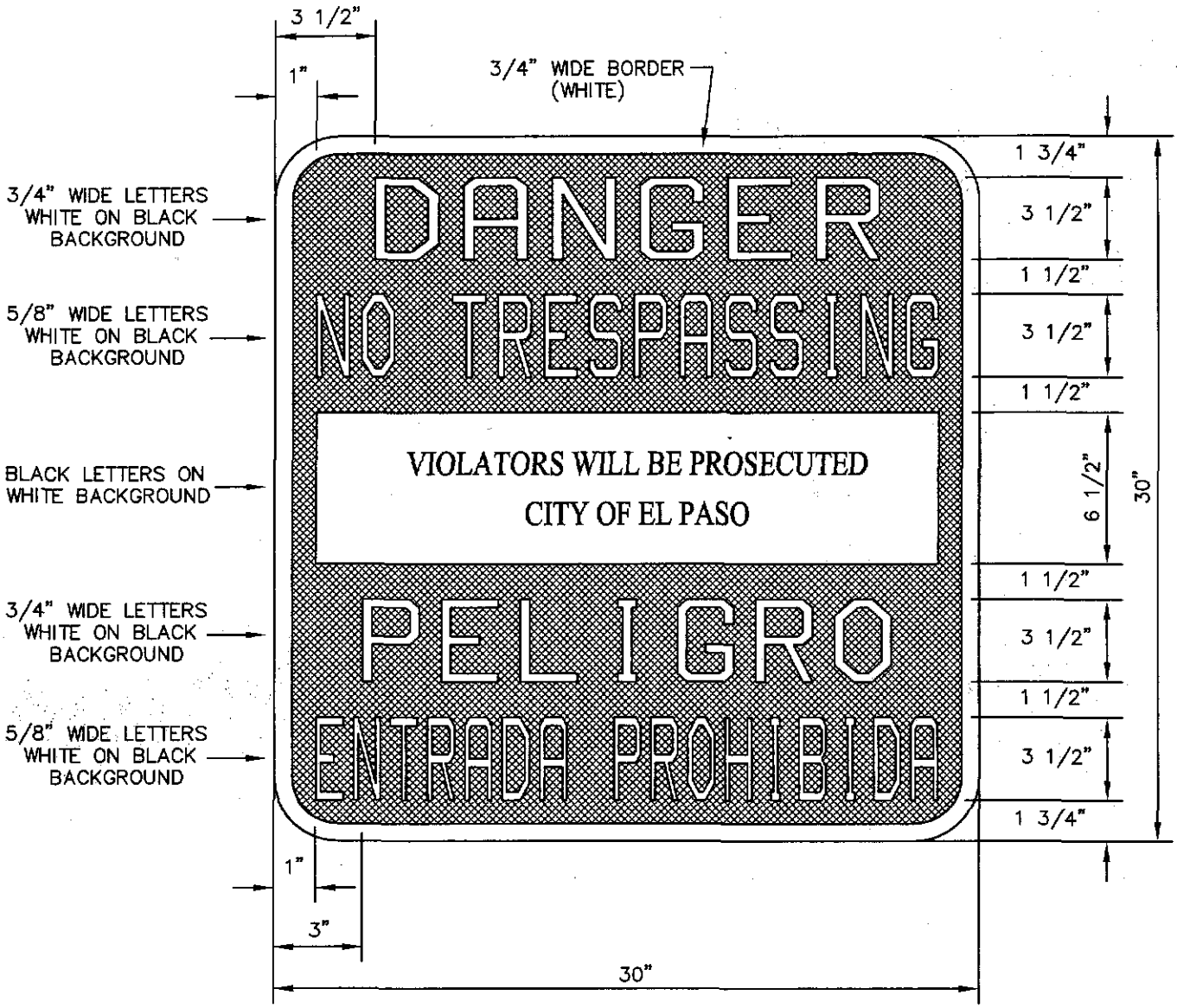

NO TRESPASSING WARNING SIGN

TITLE 19 - SUBDIVISION ORDINANCE

ENGINEERING DEPARTMENT

DESIGN STANDARDS FOR CONSTRUCTION

NO TRESPASSING WARNING SIGN

2-43

Approved By R. A. SHUBERT	Checked By H. M. E.
Date JUNE 03, 2008	Drawn By QEC / J. R.

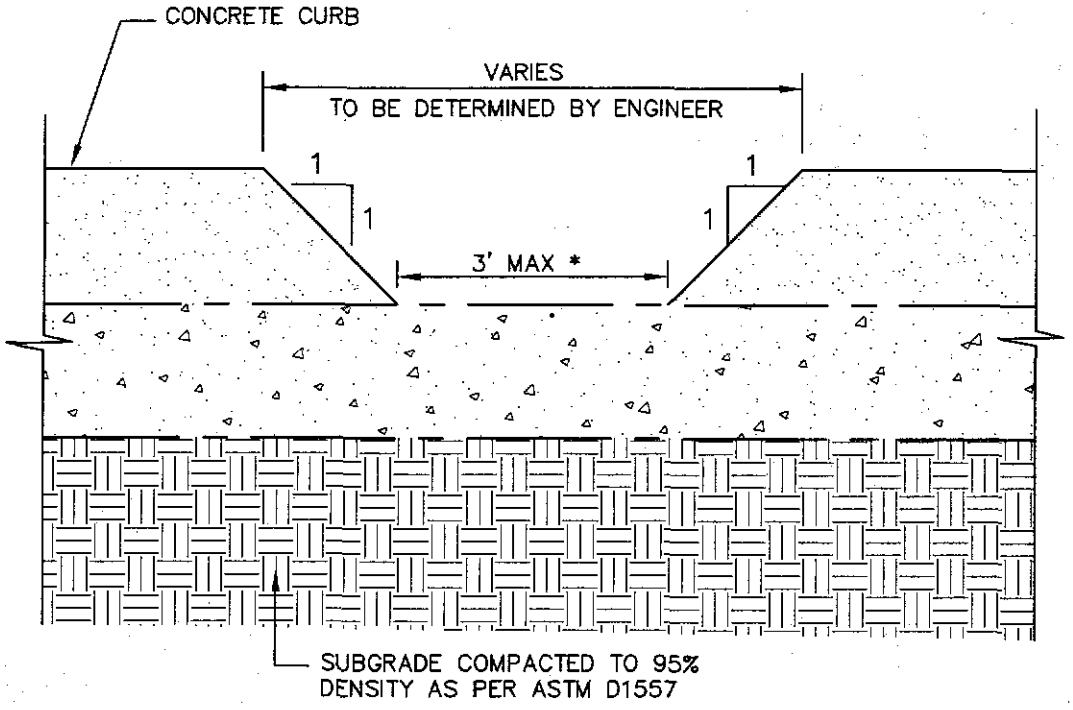

CURB OPENING FOR DRAINAGE

SCALE: N.T.S.

* NOTE: 3' MAX UNLESS APPROVAL IS GRANTED BY THE CITY ENGINEER FOR A LARGER OPENING. IF PERMISSION IS GRANTED FOR A WIDER OPENING PROTECTIVE MEASURES SUCH AS PIPE BOLLARDS OR GUARDRAIL SHALL BE USED.

TITLE 19 - SUBDIVISION ORDINANCE

ENGINEERING DEPARTMENT

DESIGN STANDARDS FOR CONSTRUCTION

CURB OPENING FOR DRAINAGE
2-44

Approved By R. A. SHUBERT	Checked By H. M. E.
Date JUNE 03, 2008	Drawn By QEC / J. R.

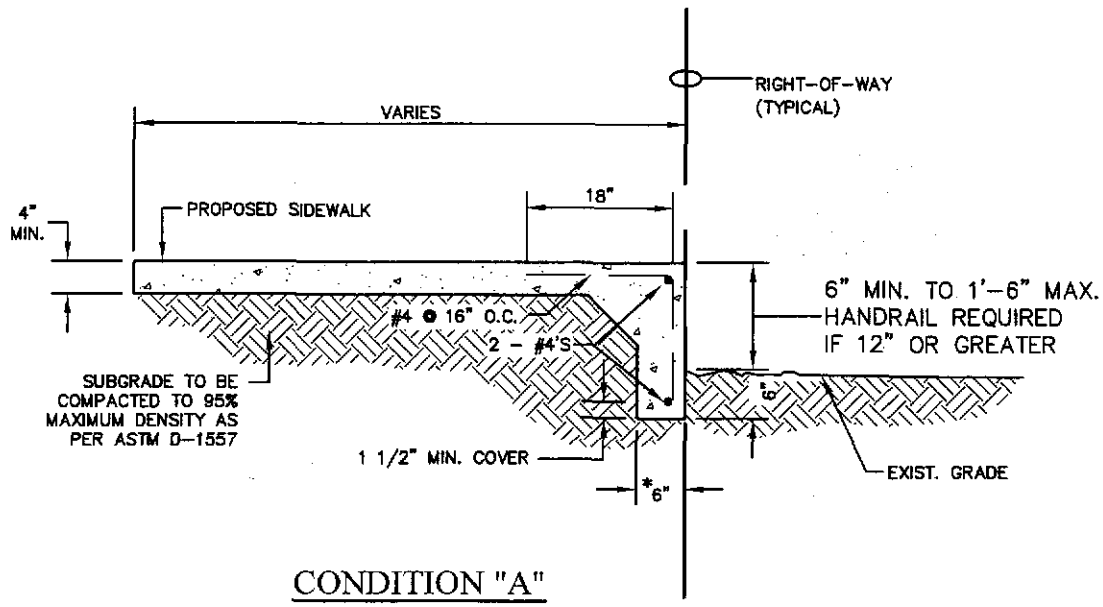

CONDITION "A"

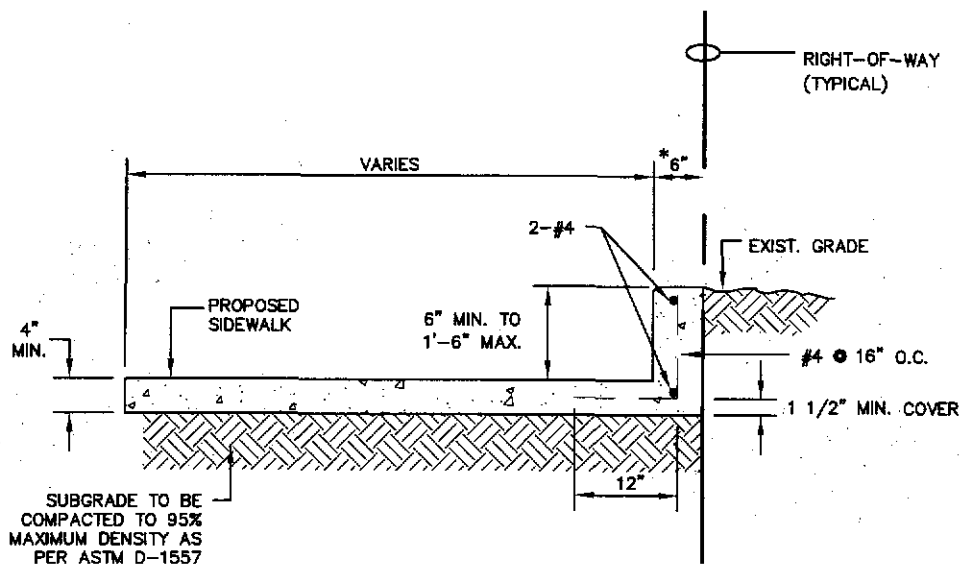

CONDITION "B"

*NOTE: THICKNESS SHALL BE 8" FOR SECTIONS WITH HANDRAIL.

TITLE 19 - SUBDIVISION ORDINANCE

ENGINEERING DEPARTMENT

DESIGN STANDARDS
FOR CONSTRUCTION

MODIFIED SIDEWALK
DETAILS "A" & "B"

2-45

Approved By R. A. SHUBERT	Checked By H. M. E.
Date JUNE 03, 2008	Drawn By QEC / J. R.

SECTION 3

SECTION 3

STREETS

TITLE	PAGE
STREET CROSS SECTIONS	3-1 thru 3-9
LOCAL STREETS	3-10
ALLEY CROSS-SECTIONS AND DETAILS	3-11
ALLEY CROSS-SECTIONS	3-11A
ALLEY DETAILS	3-12
FLUSH MEDIAN w/HEADER & RAISED MEDIAN DESIGN	3-13
TERMINUS OF STREET	3-14
MOUNTAIN RESIDENTIAL STREET	3-15
CUL-DE-SAC	3-16
"T" CUL-DE-SAC	3-17
"Y" CUL-DE-SAC	3-18
STUB STREET	3-19
CONCRETE BUS PAD (PROPOSED PAVEMENT)	3-20
CONCRETE BUS PAD (EXISTING PAVEMENT)	3-21
PAVEMENT THICKNESS DESIGN PROCEDURE	3-22A thru 3-24
PAVEMENT THICKNESS DESIGN CHART	3-25 thru 3-26
PAVEMENT THICKNESS DESIGN CHART (HEAVY)	3-27
PAVEMENT THICKNESS DESIGN	3-28 thru 3-29B
MEDIAN OPENING SIGHT DISTANCE (2-STOP CROSSING)	3-30
MEDIAN OPENING SIGHT DISTANCE (1-STOP CROSSING)	3-31
MEDIAN OPENING SPACING	3-32
CENTERLINE STRIPING WITH BIKE LANES	3-33
CENTERLINE STRIPING WITHOUT BIKE LANES	3-34
MEDIAN STRIPING WITH BIKE LANES	3-35
MEDIAN STRIPING WITHOUT BIKE LANES	3-36
ACCELERATION AND DECELERATION LANES	3-37
MINIMUM RADII AT INTERSECTION APPROACH	3-38

SECTION 3

STREETS
(continued)

TITLE	PAGE
INTERSECTION DESIGN REQUIREMENTS	3-39
GEOMETRIC DESIGN OF ROADWAYS	3-40
INTERSECTION DESIGN	3-41
INTERSECTION OFFSET	3-41A
CLUSTER PARKING	3-42
STREET PAVING CUT	3-43
STREET PAVING CUT (CONDUIT)	3-44
STREET PAVING CUT FOR FLEXIBLE PIPE	3-45
GUARD POST DETAIL	3-46
GUARD RAIL	3-47
TERMINUS METAL BEAM GUARD FENCE	3-48
PROPOSED CITY MONUMENT LOCATIONS	3-49
PLANE SURVEYS AND GEODETIC CONTROL	3-50
SURVEYS AND MONUMENTS	3-51
CITY SURVEY MONUMENT	3-52
SINGLE EYEBROW CUL-DE-SAC	3-53
DUAL EYEBROW CUL-DE-SAC	3-54
TURNING HEEL CURVE	3-55
PROPOSED 70 DEGREE ANGLE (MIN.) TURNING HEEL	3-56
PROPOSED 90 DEGREE ANGLE TURNING HEEL	3-57
PROPOSED 110 DEGREE ANGLE (MAX.) TURNING HEEL	3-58

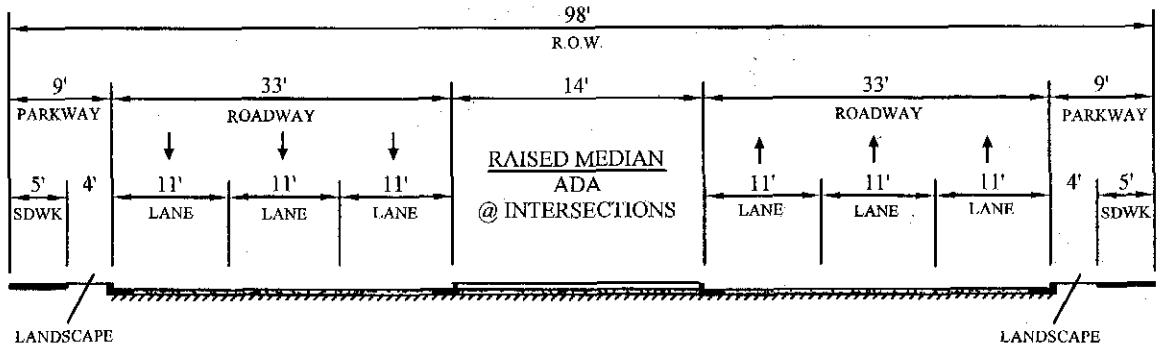

MAJOR ARTERIAL STREET

SIX (6) LANES

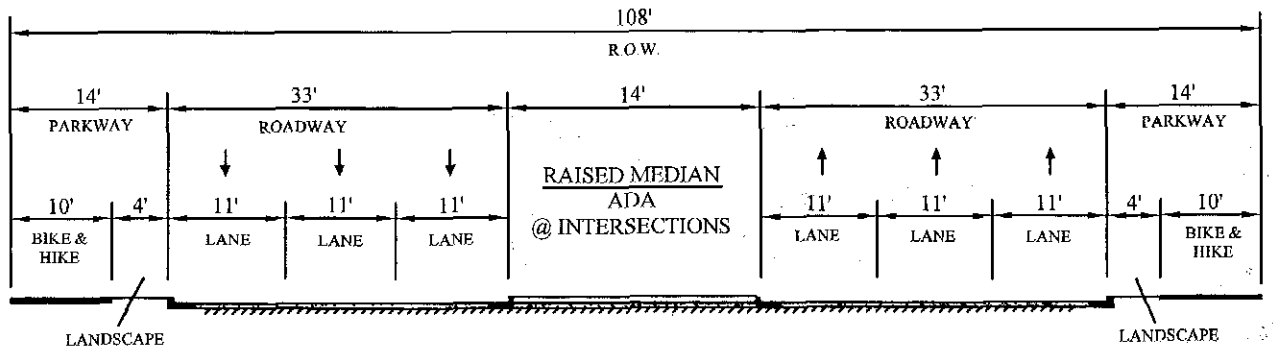

MAJOR ARTERIAL STREET WITH BIKE\HIKE

SIX (6) LANES

TITLE 19 - SUBDIVISION ORDINANCE

ENGINEERING DEPARTMENT

DESIGN STANDARDS
FOR CONSTRUCTION

STREET CROSS-SECTIONS

3-1

Approved By R. A. SHUBERT Checked By H. M. E.
Date JUNE 03, 2008 Drawn By QEC / J. R.

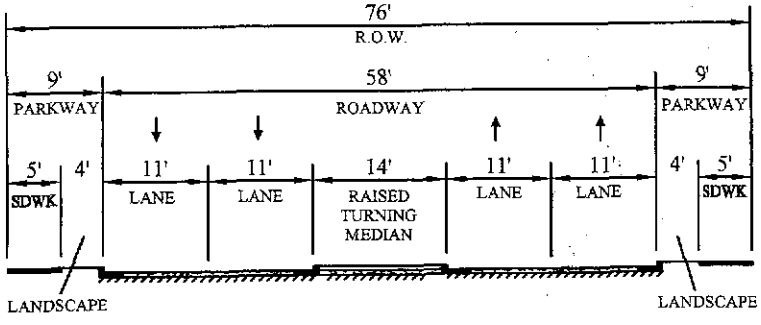

MINOR ARTERIAL STREET

FOUR (4) LANES

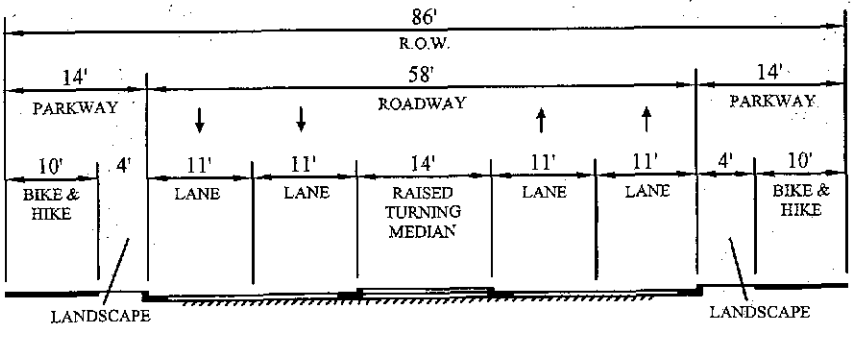

MINOR ARTERIAL STREET WITH BIKE\HIKE

FOUR (4) LANES

TITLE 19 - SUBDIVISION ORDINANCE

ENGINEERING DEPARTMENT

DESIGN STANDARDS
FOR CONSTRUCTION

STREET CROSS-SECTIONS

3-2

Approved By R. A. SHUBERT	Checked By H. M. E.
Date JUNE 03, 2008	Drawn By QEC / J. R.

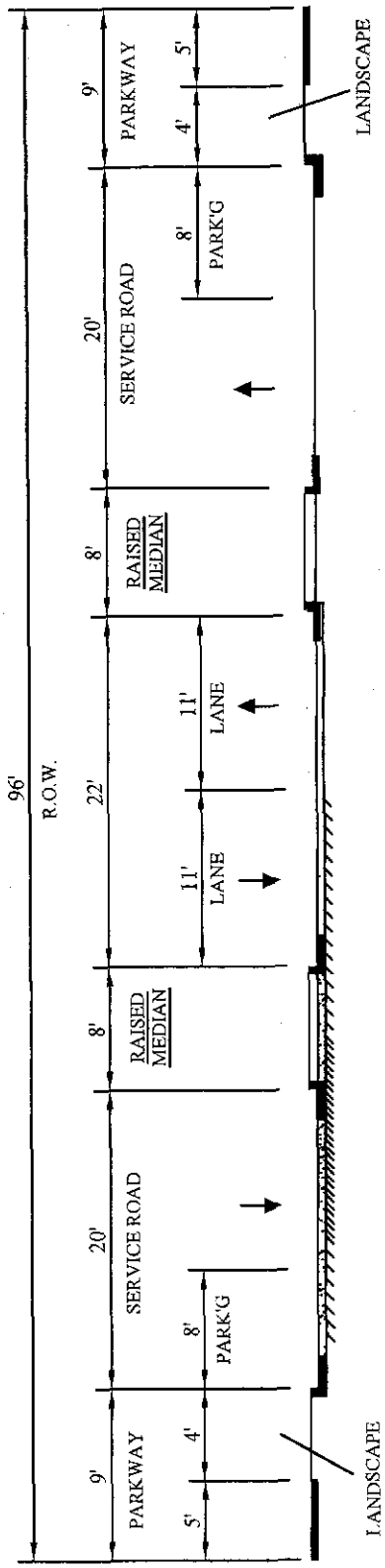

BOULEVARD

CAN BE DESIGNED TO PROVIDE FOR ANGLE PARKING

TITLE 19 - SUBDIVISION ORDINANCE

ENGINEERING DEPARTMENT

DESIGN STANDARDS FOR CONSTRUCTION

STREET CROSS- SECTIONS

3-3

Approved By R. A. SHUBERT	Checked By H. M. E.
Date JUNE 03, 2008	Drawn By QEC / J. R.

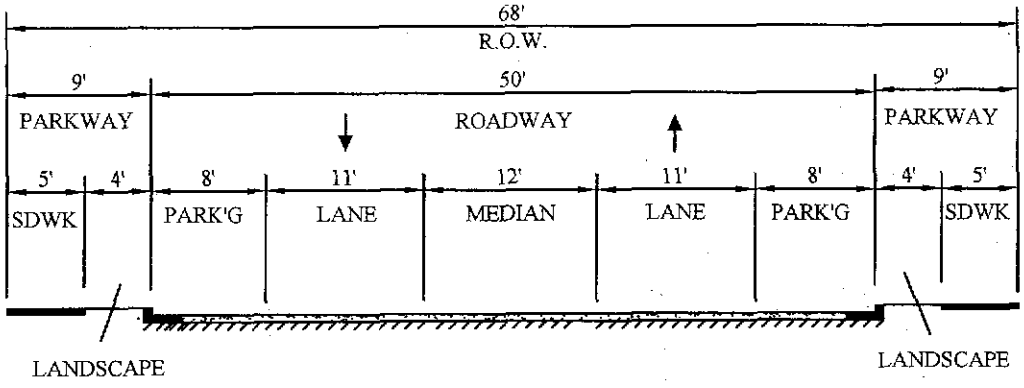

NON-RESIDENTIAL COLLECTOR

CAN BE DESIGNED TO PROVIDE FOR ANGLE PARKING
MEDIAN MAY BE RAISED

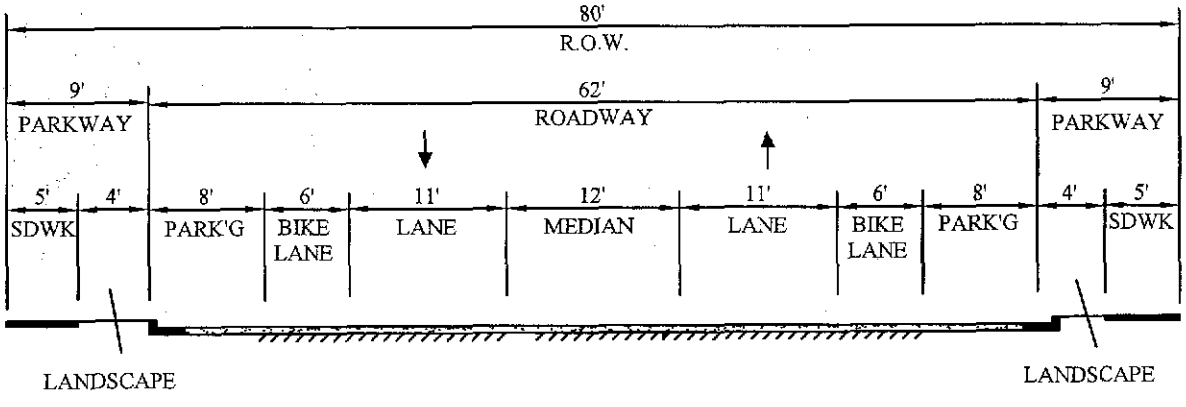

NON-RESIDENTIAL COLLECTOR WITH BIKE LANES

CAN BE DESIGNED TO PROVIDE FOR ANGLE PARKING
MEDIAN MAY BE RAISED

TITLE 19 - SUBDIVISION ORDINANCE

ENGINEERING DEPARTMENT

DESIGN STANDARDS FOR CONSTRUCTION

STREET CROSS-SECTIONS

3-4

Approved By R. A. SHUBERT	Checked By H. M. E.
Date JUNE 03, 2008	Drawn By QEC / J. R.

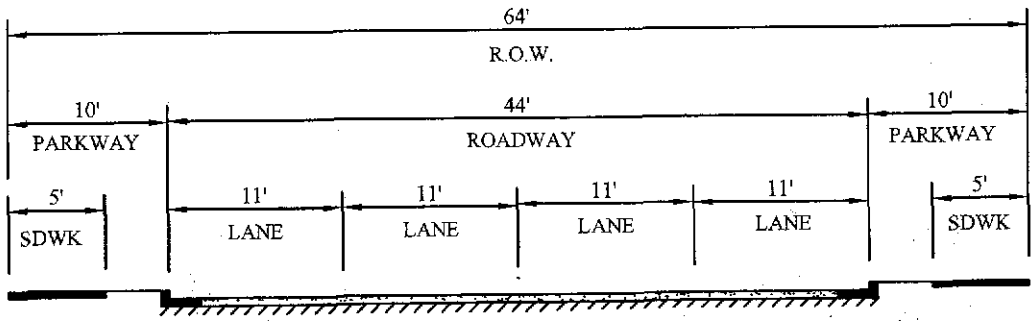

NON-RESIDENTIAL 4 LANE COLLECTOR

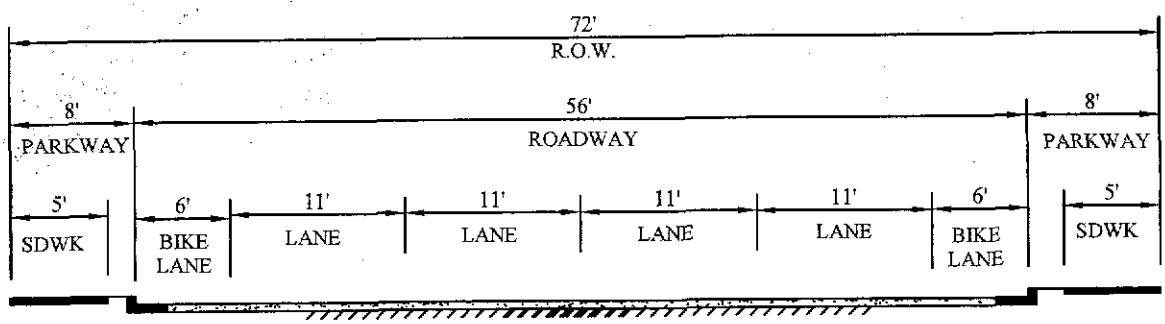

NON-RESIDENTIAL 4 LANE COLLECTOR WITH BIKE LANES

TITLE 19 - SUBDIVISION ORDINANCE

ENGINEERING DEPARTMENT

DESIGN STANDARDS FOR CONSTRUCTION

STREET CROSS-SECTIONS

3-5

Approved By R. A. SHUBERT	Checked By H. M. E.
Date JUNE 03, 2008	Drawn By QEC / J. R.

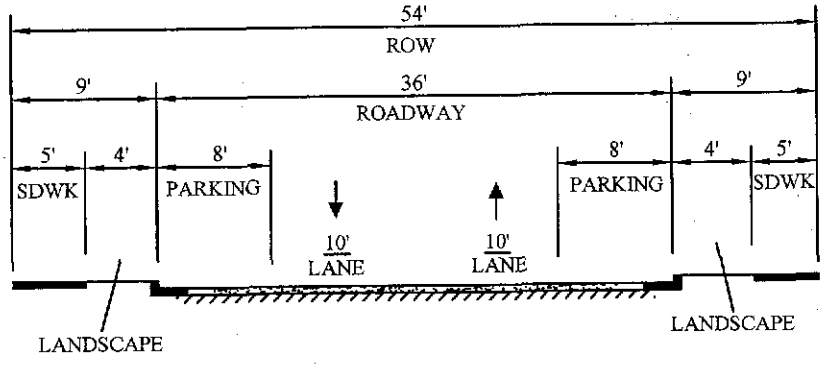

RESIDENTIAL COLLECTOR

CAN BE DESIGNED TO PROVIDE FOR ANGLE PARKING

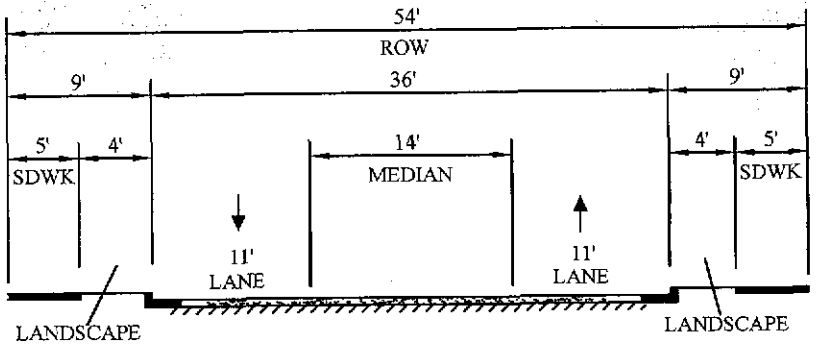

RESIDENTIAL COLLECTOR STREET SECTION

TWO (2) LANES

CAN BE DESIGNED TO PROVIDE FOR ANGLE PARKING

TITLE 19 - SUBDIVISION ORDINANCE

ENGINEERING DEPARTMENT

DESIGN STANDARDS FOR CONSTRUCTION

STREET CROSS-SECTIONS

3-6

Approved By R. A. SHUBERT	Checked By H. M. E.
Date JUNE 03, 2008	Drawn By QEC / J. R.

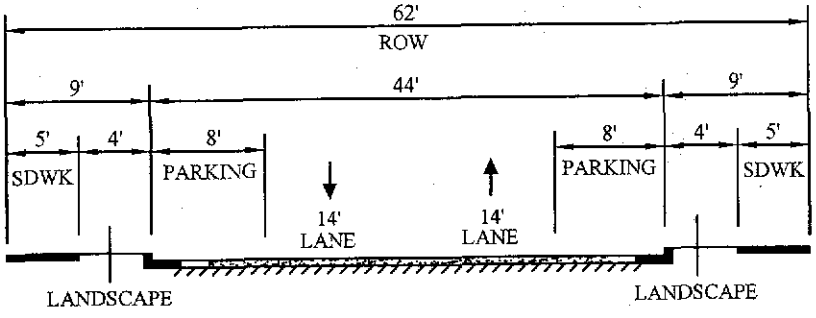

MULTI-FAMILY & COMMERCIAL/INDUSTRIAL LOCAL STREET 1

CAN BE DESIGNED TO PROVIDE FOR ANGLE PARKING

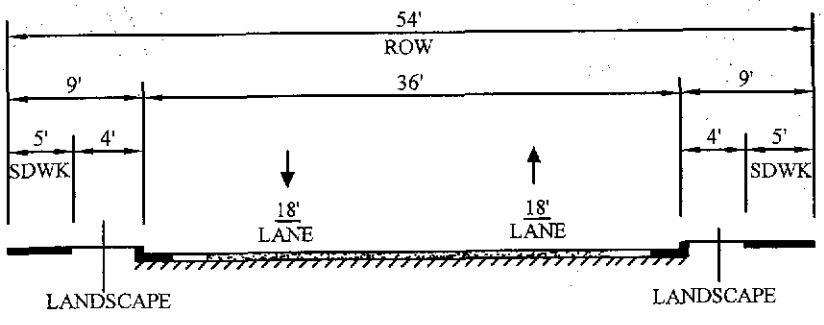

MULTI-FAMILY & COMMERCIAL/INDUSTRIAL LOCAL STREET 2

CAN BE DESIGNED TO PROVIDE FOR ANGLE PARKING

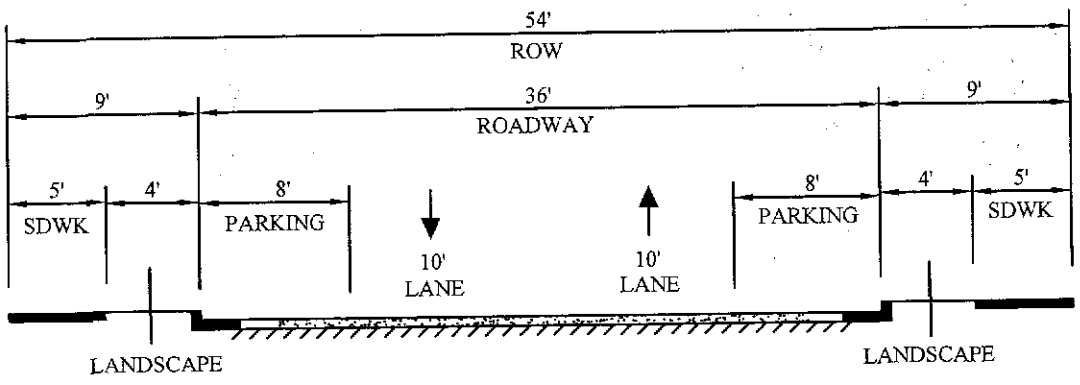

36' LOCAL RESIDENTIAL 1

NOTE: CROSS SECTIONS ARE MINIMUM, STANDARD REQUIREMENTS

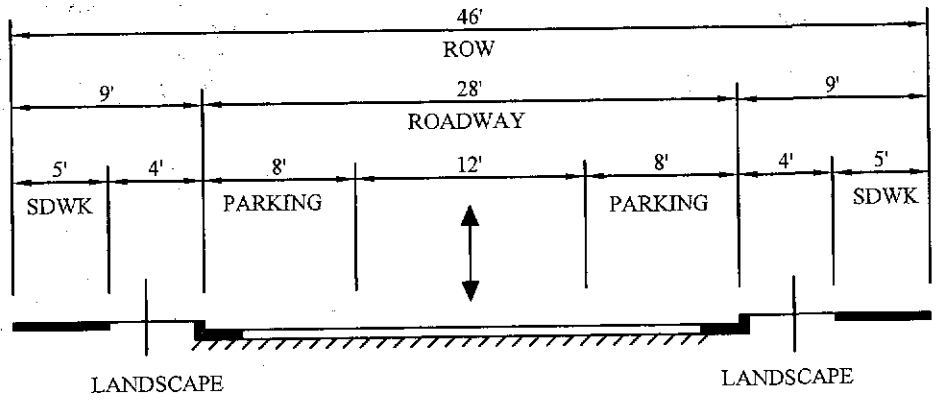

28' LOCAL RESIDENTIAL 2

NOTE: CROSS SECTIONS ARE MINIMUM, STANDARD REQUIREMENTS

TITLE 19 - SUBDIVISION ORDINANCE

ENGINEERING DEPARTMENT

DESIGN STANDARDS FOR CONSTRUCTION

STREET CROSS -SECTIONS

3-8

Approved By R. A. SHUBERT	Checked By H. M. E.
Date JUNE 03, 2008	Drawn By QEC / J. R.

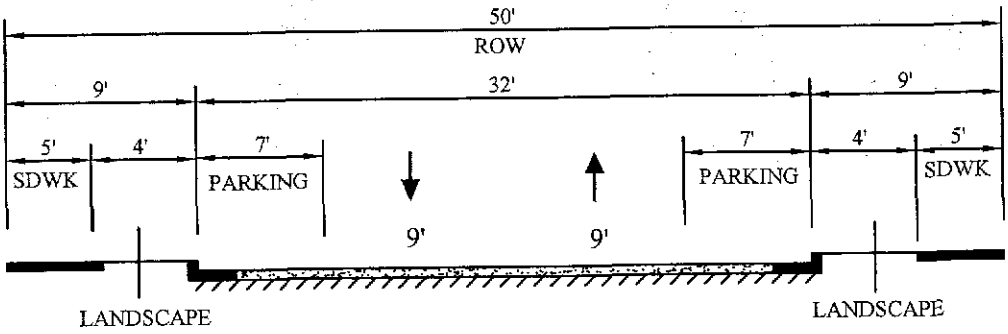

32' LOCAL RESIDENTIAL 3

NOTE: CROSS SECTIONS ARE MINIMUM, STANDARD REQUIREMENTS

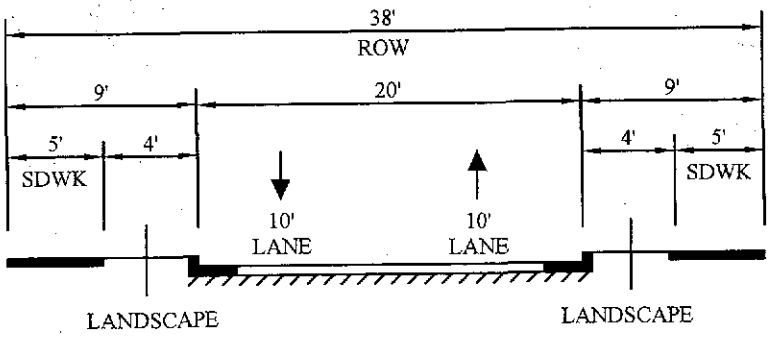

20' RESIDENTIAL LANE NO PARKING

TITLE 19 - SUBDIVISION ORDINANCE

ENGINEERING DEPARTMENT

DESIGN STANDARDS FOR CONSTRUCTION

STREET CROSS-SECTIONS

3-9

Approved By R. A. SHUBERT
Date JUNE 03, 2008

Checked By H. M. E.
Drawn By QEC / J. R.

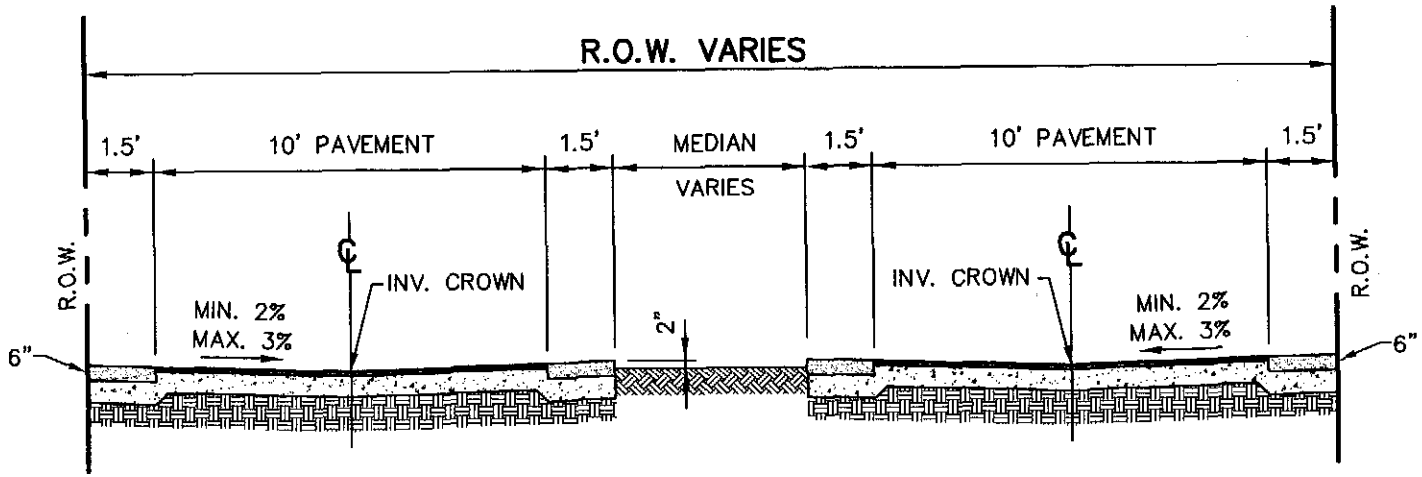

DIVIDED MOUNTAIN RESIDENTIAL STREET

NOTES:

1. WITHIN A DIVIDED RESIDENTIAL STREET, THE MEDIAN MAY BE DESIGNED TO PERMIT A SWALE FOR DRAINAGE PURPOSES.
2. HEADER CURBING AS A MINIMUM SHALL BE REQUIRED, HOWEVER, STANDARD CURBING SHALL BE ALLOWED.
3. STREET CROSS-SECTION TO BE INVERTED CROWN.
4. GRADES IN EXCESS OF 11% MUST BE APPROVED BY THE CITY ENGINEER AND FIRE DEPARTMENT, BUT IN NO CASE SHALL GRADES EXCEED 15%.
5. GRADES AT INTERSECTION IN EXCESS OF 3% SHALL HAVE THE APPROVAL OF THE CITY ENGINEER.
6. MINIMUM MEDIAN WIDTH – FOUR (4') FEET.

TITLE 19 - SUBDIVISION ORDINANCE

ENGINEERING DEPARTMENT

DESIGN STANDARDS FOR CONSTRUCTION

LOCAL STREETS

3-10

Approved By R. A. SHUBERT
Date JUNE 03, 2008

Checked By H. M. E.
Drawn By QEC / J. R.

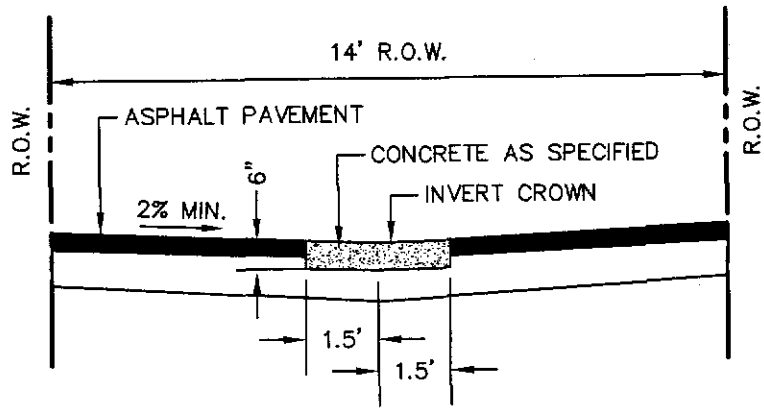

ALLEY
ONE (1) WAY LANE

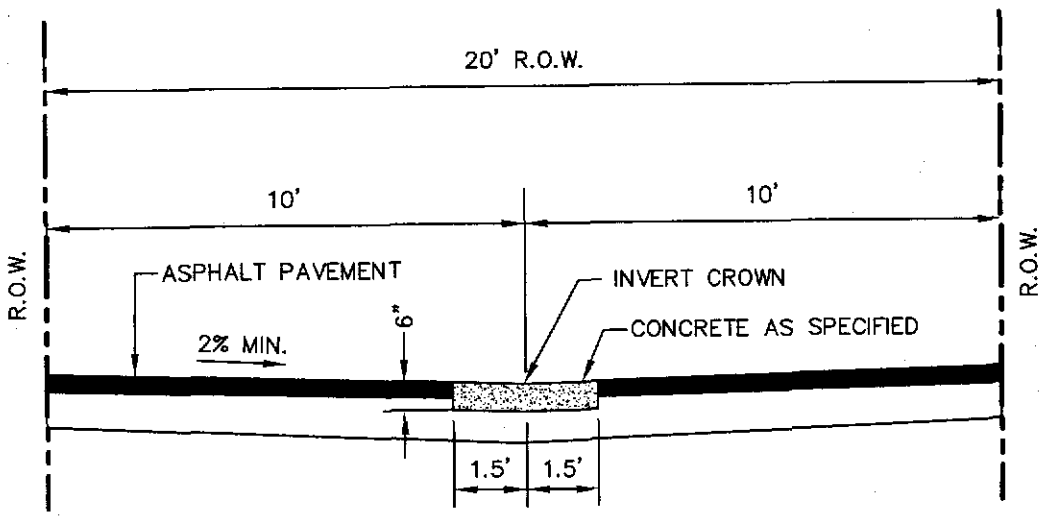

ALLEY
TWO (2) LANES

NOTES:

1. ONE (1)–THREE FOOT CONCRETE VALLEY GUTTER LOCATED AT THE CENTERLINE OF THE RIGHT–OF–WAY WHEN THE LONGITUDINAL SLOPE OF THE ALLEY IS LESS THAN ONE (1) PERCENT, AND DRAINAGE IS TO BE CARRIED WITHIN THE ALLEY.
2. NO CONCRETE VALLEY GUTTER REQUIRED WHEN LONGITUDINAL SLOPE OF THE ALLEY IS EQUAL OR GREATER THAN ONE (1) PERCENT.

TITLE 19 - SUBDIVISION ORDINANCE

ENGINEERING DEPARTMENT

DESIGN STANDARDS FOR CONSTRUCTION

ALLEY CROSS-SECTIONS AND DETAILS

3-11

Approved By R. A. SHUBERT	Checked By H. M. E.
Date JUNE 03, 2008	Drawn By QEC / J. R.

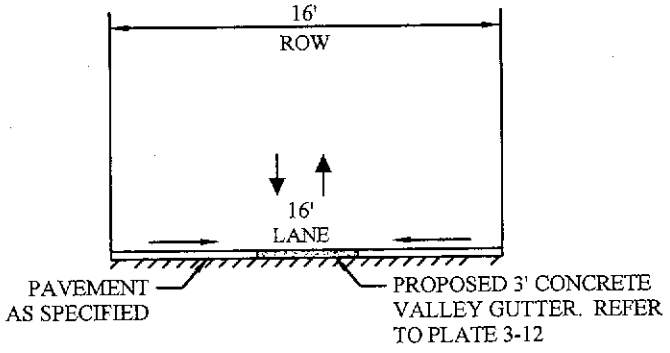

16' ALLEY NO PARKING

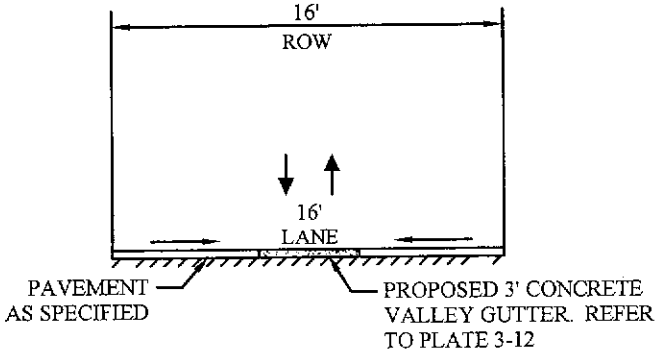

16' ALLEY
SINGLE FAMILY RESIDENTIAL

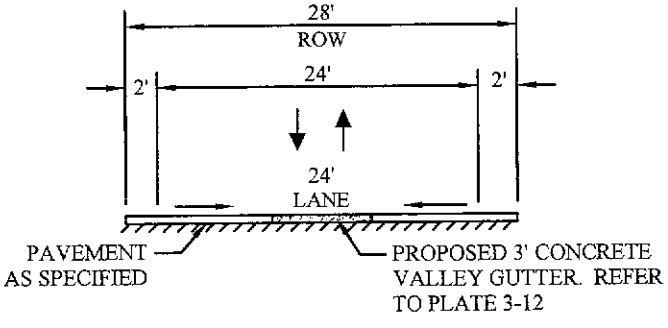

28' ALLEY
COMMERCIAL/INDUSTRIAL/MULTI-FAMILY

TITLE 19 - SUBDIVISION ORDINANCE

ENGINEERING DEPARTMENT

DESIGN STANDARDS
FOR CONSTRUCTION

ALLEY CROSS-SECTIONS

3-11A

Approved By R. A. SHUBERT	Checked By H. M. E.
Date JUNE 03, 2008	Drawn By QEC / J. R.

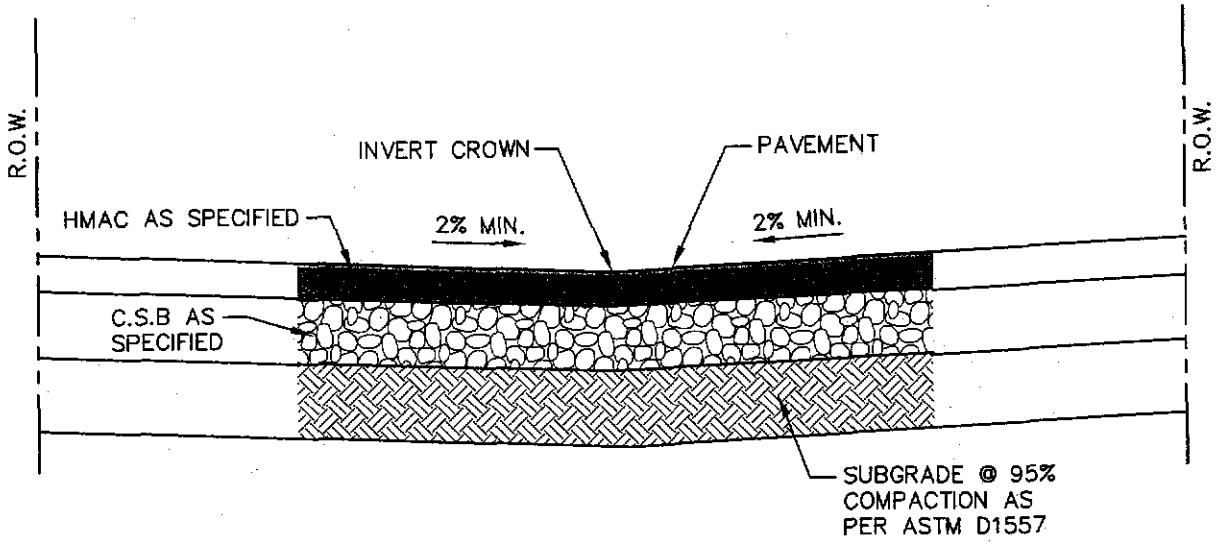

ALLEY PAVEMENT

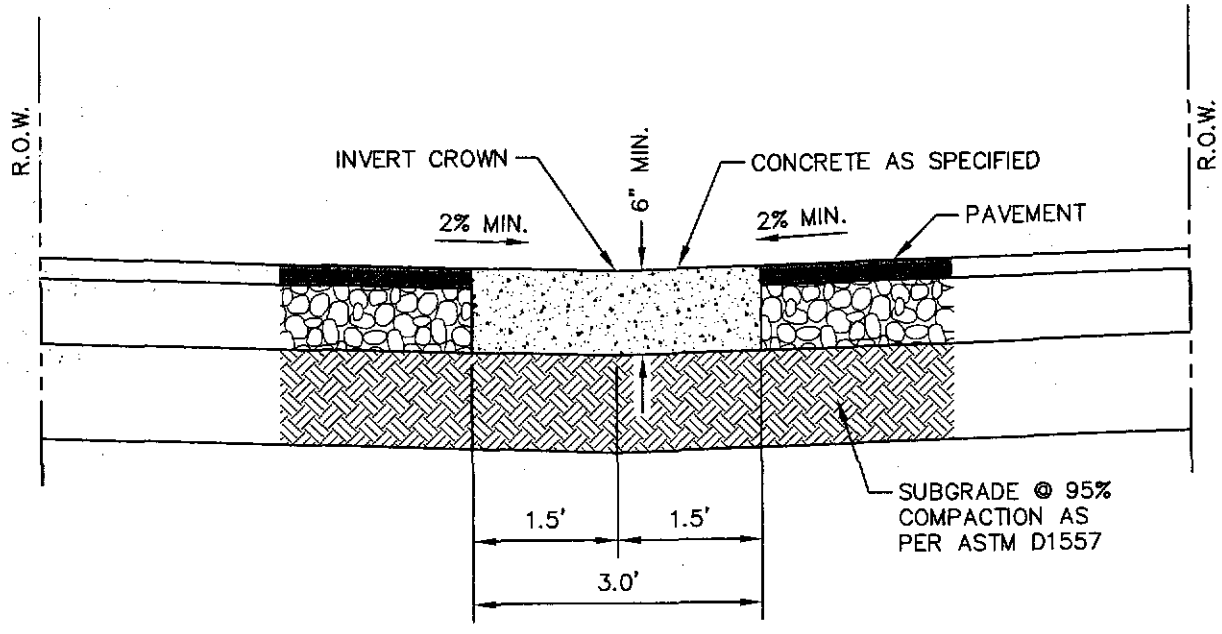

VALLEY GUTTER

NOTES:

COMPRESSIVE STRENGTH OF CONCRETE SHALL BE F_C= 3000 P.S.I. MINIMUM

TITLE 19 - SUBDIVISION ORDINANCE

ENGINEERING DEPARTMENT

DESIGN STANDARDS FOR CONSTRUCTION

ALLEY DETAILS

3-12

Approved By R. A. SHUBERT	Checked By H. M. E.
Date JUNE 03, 2008	Drawn By QEC / J. R.

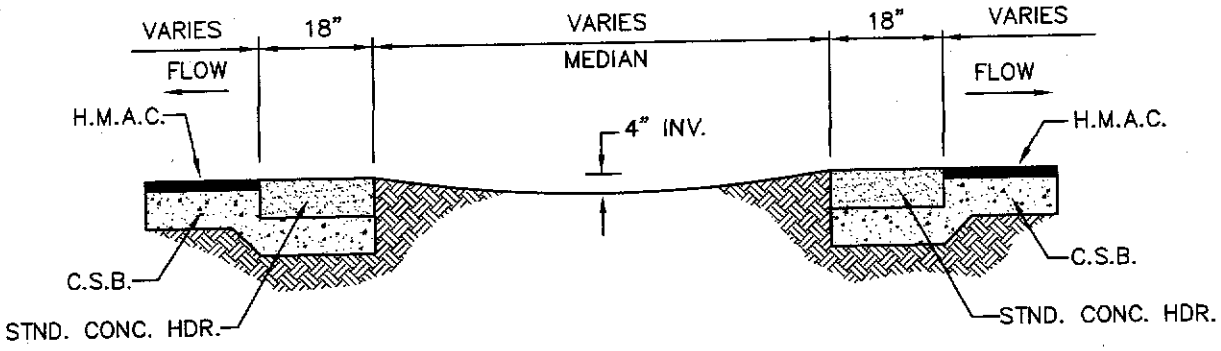

FLUSH MEDIAN WITH HEADER DESIGN

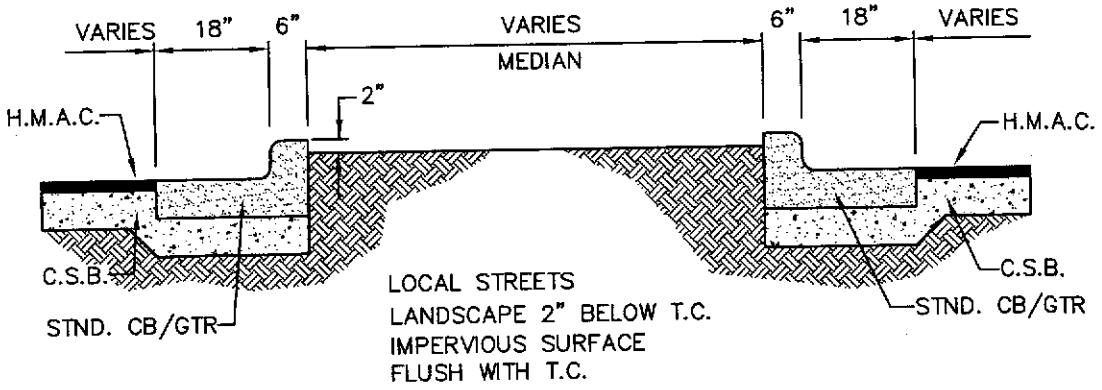

RAISED MEDIAN DESIGN

NOTE:
THE MEDIAN MAY BE DESIGNED TO PERMIT A SWALE FOR DRAINAGE PURPOSES.

TITLE 19 - SUBDIVISION ORDINANCE

ENGINEERING DEPARTMENT

DESIGN STANDARDS FOR CONSTRUCTION

FLUSH MEDIAN W/HEADER & RAISED MEDIAN DESIGN

3-13

Approved By R. A. SHUBERT	Checked By H. M. B.
Date JUNE 03, 2008	Drawn By QEC / J. R.

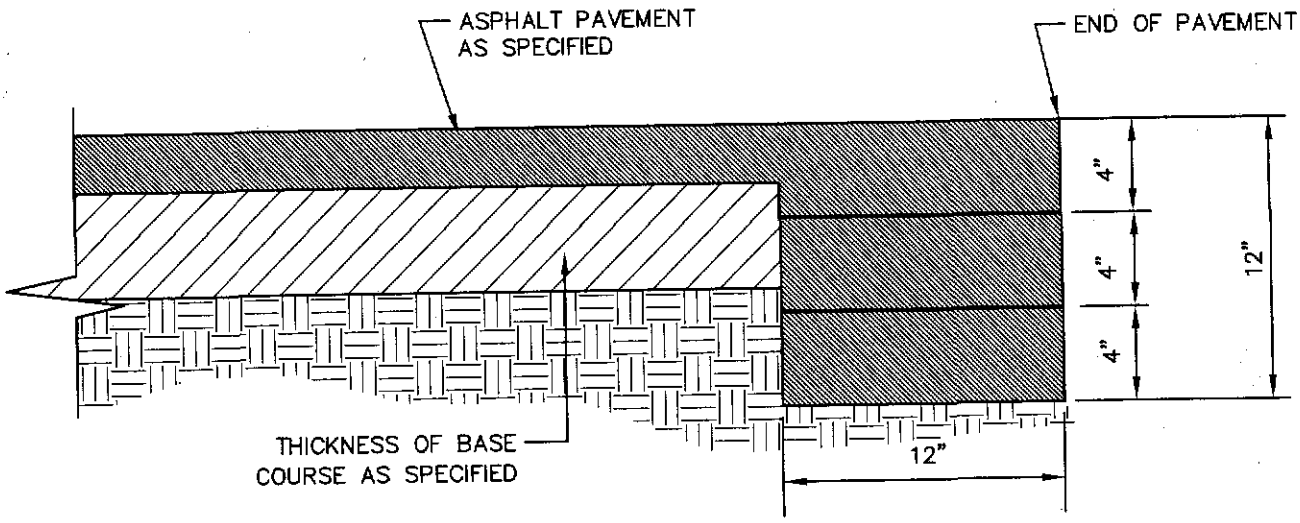

TERMINUS OF STREET

NOTE:

TERMINUS MUST BE CONSTRUCTED IN 4" LIFTS. FINAL LIFT MUST BE PLACED WITH FINAL PAVEMENT COURSE. COMPACTION REQUIREMENTS SHALL BE 98% MINIMUM AS PER ASTM D1557 OR AS RECOMMENDED BY THE PROJECT GEOTECHNICAL ENGINEER.

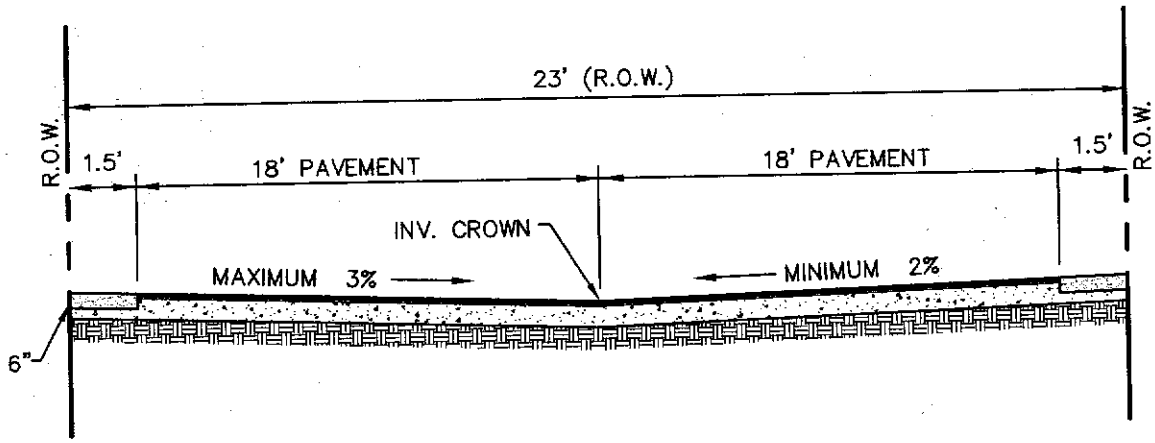

MOUNTAIN RESIDENTIAL STREET

TWO (2) LANES ONLY ON (M.D.A.)

1. 18" x 6" HEADER CURB.
2. MINIMUM 23 FOOT RIGHT-OF-WAY.
3. STREET CROSS-SECTION TO BE INVERTED CROWN. (REFER TO NOTE No. 7).
4. GRADES IN EXCESS OF 11% MUST BE APPROVED BY THE CITY ENGINEER AND FIRE DEPARTMENT, BUT IN NO CASE SHALL GRADES EXCEED 18%.
5. GRADES AT INTERSECTIONS IN EXCESS OF 3% SHALL HAVE THE APPROVAL OF THE CITY ENGINEER.
6. HEADER CURBING AS A MINIMUM SHALL BE REQUIRED, HOWEVER, STANDARD CURBING SHALL BE PERMITTED.
7. A CROWNED SECTION CAN BE USED IN LIEU OF AN INVERTED CROWN WITH THE APPROVAL OF THE CITY ENGINEER.

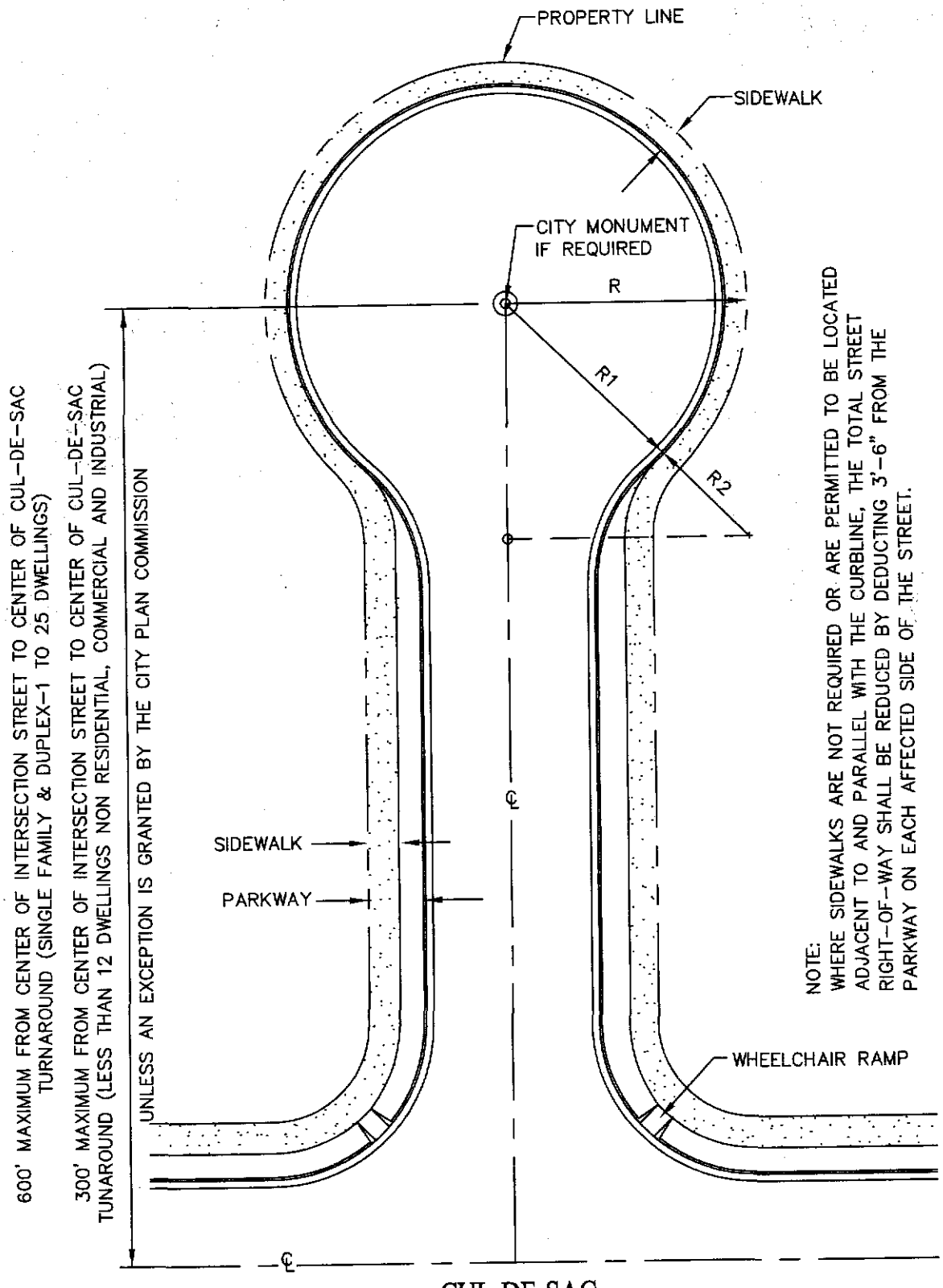

CUL-DE-SAC

TITLE 19 - SUBDIVISION ORDINANCE

ENGINEERING DEPARTMENT

DESIGN STANDARDS FOR CONSTRUCTION

CUL-DE-SAC

3-16

Approved By R. A. SHUBERT	Checked By H. M. E.
Date JUNE 03, 2008	Drawn By QEC / J. R.

NOTE:
WHERE SIDEWALKS ARE NOT REQUIRED OR ARE PERMITTED TO BE LOCATED ADJACENT TO AND PARALLEL WITH THE CURBLINE, THE TOTAL STREET RIGHT-OF-WAY SHALL BE REDUCED BY DEDUCTING 3'-6" FROM THE PARKWAY ON EACH AFFECTED SIDE OF THE STREET.

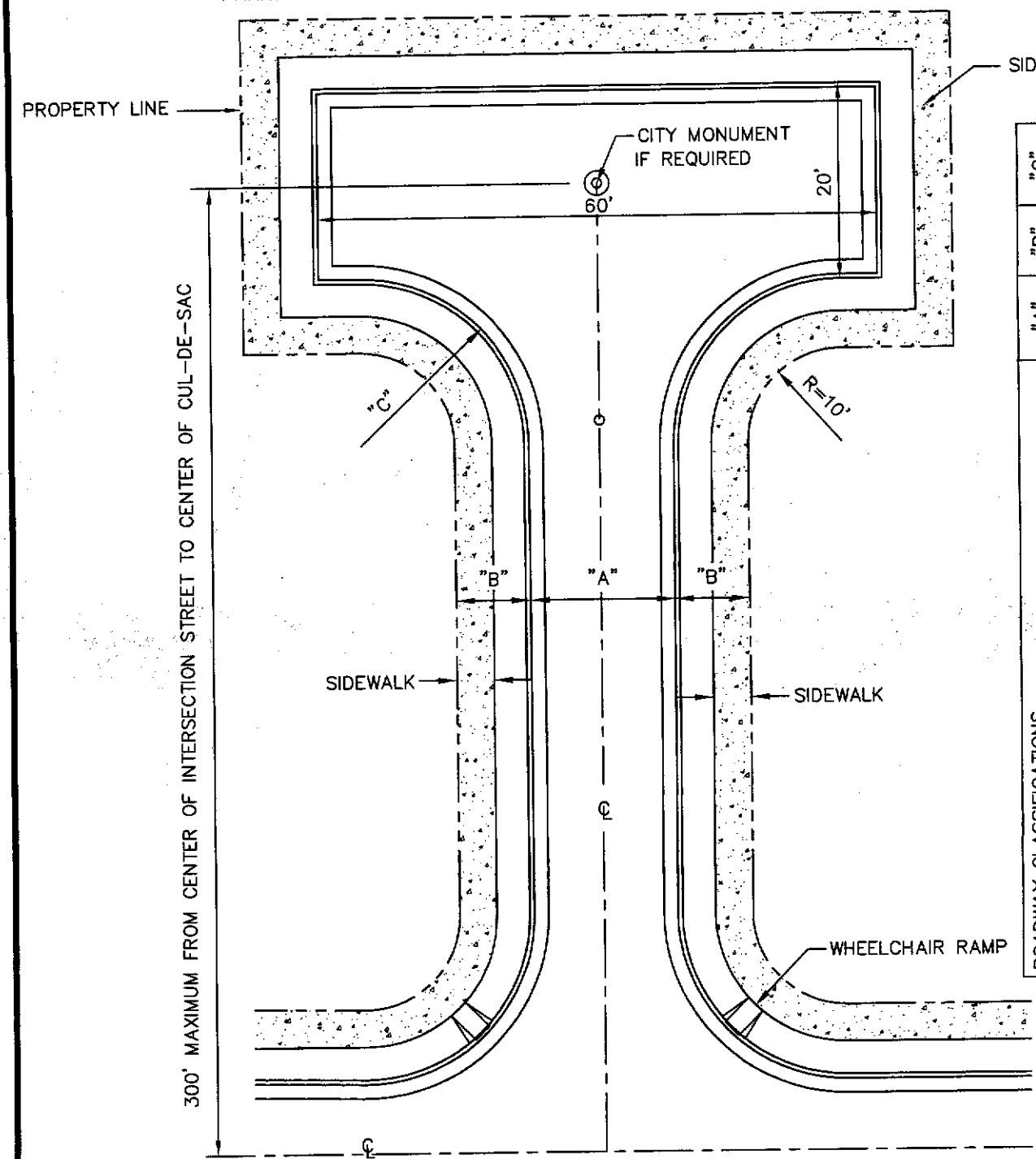

ROADWAY CLASSIFICATIONS	"A"	"B"	"C"
MINOR RESIDENTIAL ACCESS /MOUNTAIN RESIDENTIAL	20 FT.	8'	18'
MAJOR RESIDENTIAL ACCESS	28 FT.	8'	18'

"T" CUL-DE-SAC

TITLE 19 - SUBDIVISION ORDINANCE

ENGINEERING DEPARTMENT

DESIGN STANDARDS FOR CONSTRUCTION

"T" CUL-DE-SAC

3-17

Approved By R. A. SHUBERT
Date JUNE 03, 2008
Checked By H. M. E.
Drawn By QEC / J. R.

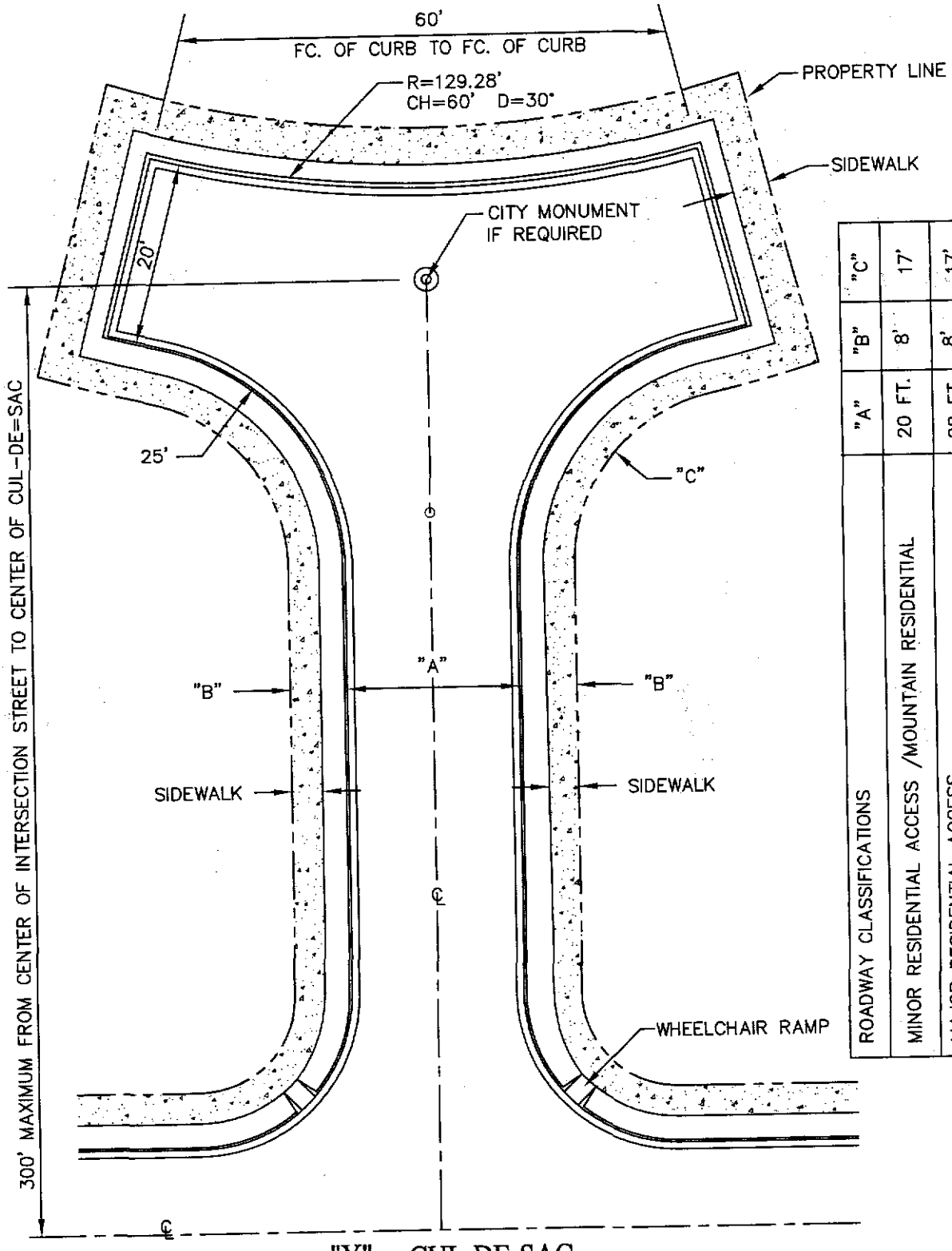

ROADWAY CLASSIFICATIONS	"A"	"B"	"C"
MINOR RESIDENTIAL ACCESS /MOUNTAIN RESIDENTIAL	20 FT.	8'	17'
MAJOR RESIDENTIAL ACCESS	28 FT.	8'	17'

NOTE:
WHERE SIDEWALKS ARE NOT REQUIRED OR ARE PERMITTED TO BE LOCATED ADJACENT TO AND PARALLEL WITH THE CURBLINE, THE TOTAL STREET RIGHT-OF-WAY SHALL BE REDUCED BY DEDUCTING 3'-6" FROM THE PARKWAY ON EACH AFFECTED SIDE OF THE STREET.

"Y" CUL-DE-SAC

TITLE 19 - SUBDIVISION ORDINANCE

ENGINEERING DEPARTMENT

DESIGN STANDARDS FOR CONSTRUCTION

"Y" CUL-DE-SAC

3-18

Approved By R. A. SHUBERT
Date JUNE 03, 2008

Checked By H. M. E.
Drawn By QEC / J. R.

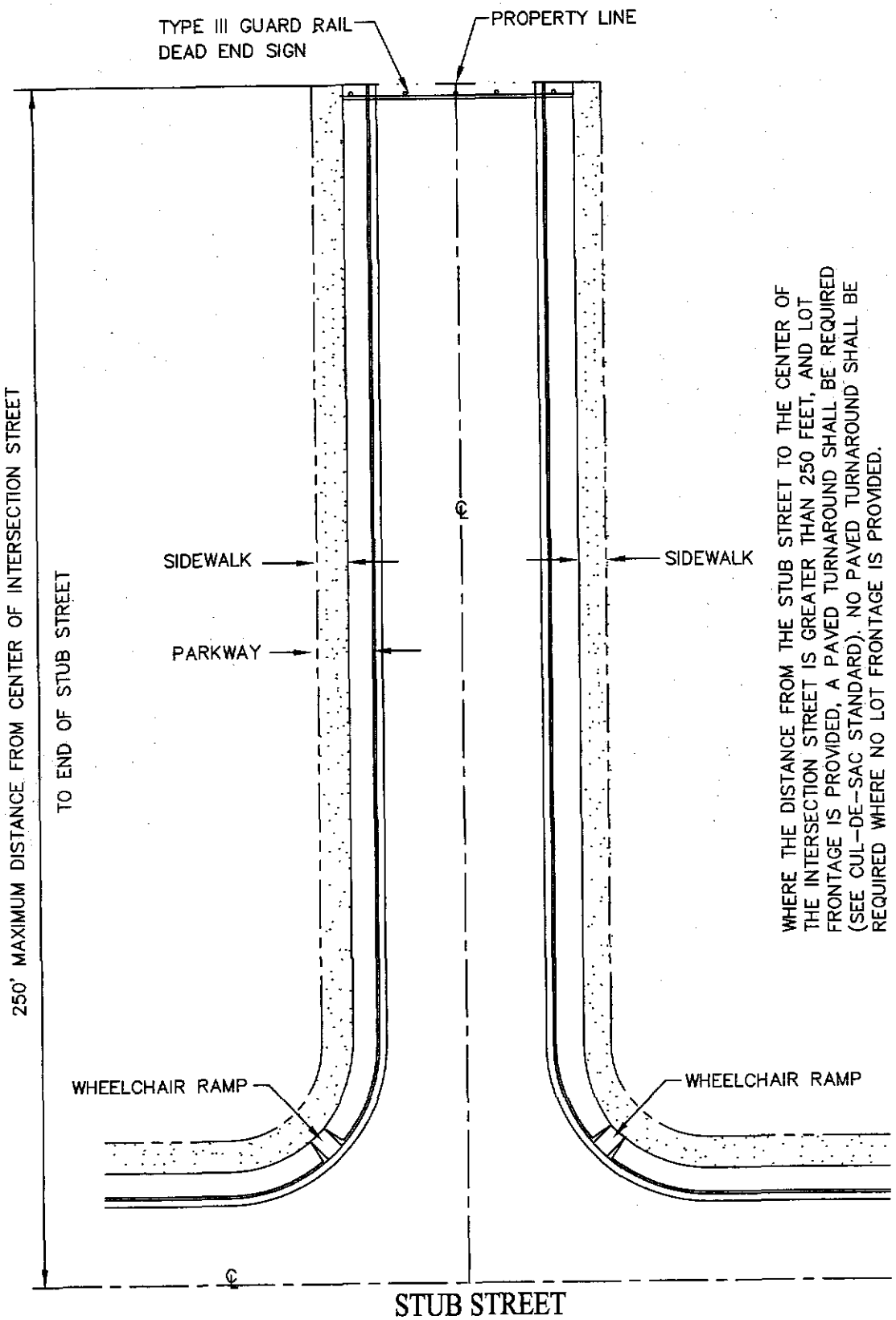

STUB STREET

TITLE 19 - SUBDIVISION ORDINANCE

ENGINEERING DEPARTMENT

DESIGN STANDARDS FOR CONSTRUCTION

STUB STREET

3-19

Approved By R. A. SHUBERT	Checked By H. M. E.
Date JUNE 03, 2008	Drawn By QEC / J. R.

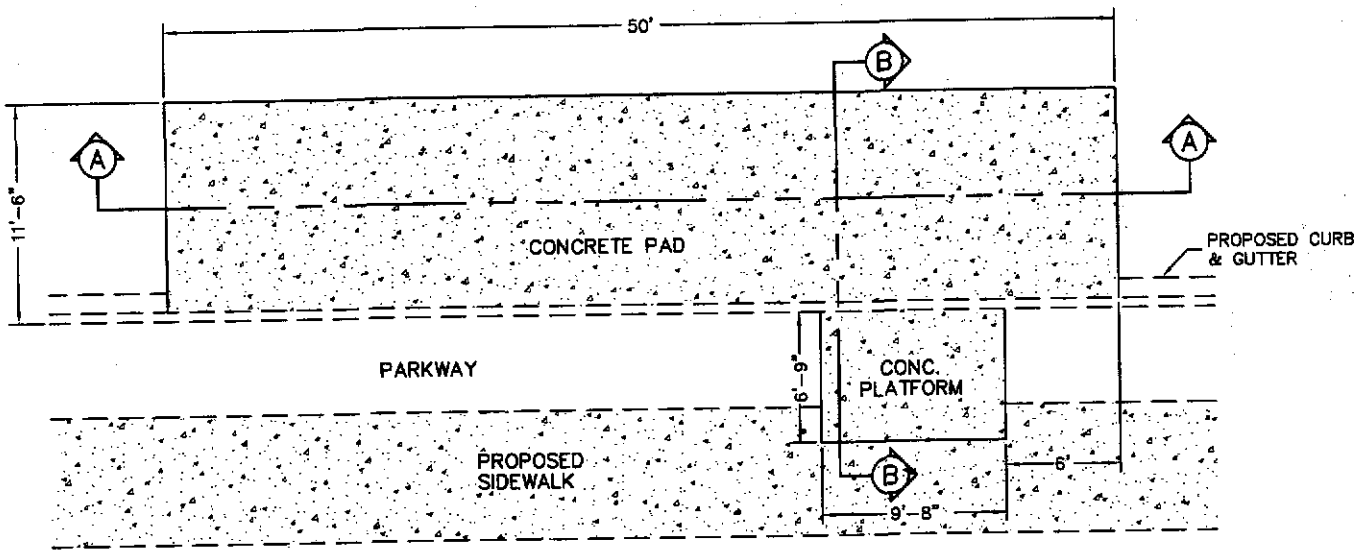

PLAN : CONC. BUS PAD

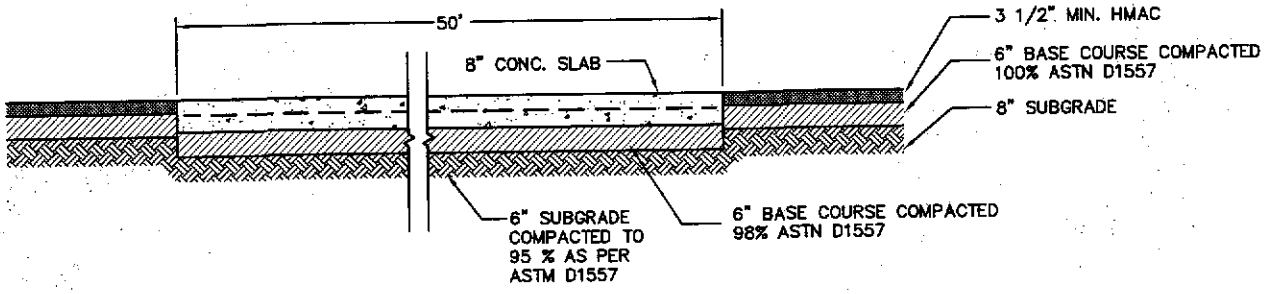

SECTION A–A

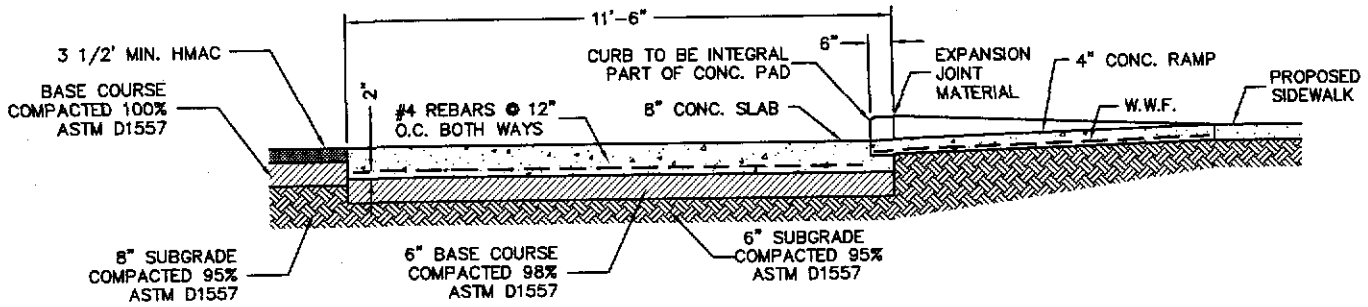

SECTION B–B

NOTE

WHERE NEW BUS STOP PADS ARE CONSTRUCTED AT BUS STOPS, BAY OR OTHER AREAS WHERE A LIFT OR RAMP IS TO BE DEPLOYED, THEY SHALL HAVE A FIRM, STABLE SURFACE; A MIN. CLEAR LENGTH OF 96 INCHES (MEASURED FROM THE CURB OR VEHICLE ROADWAY EDGE) AND A MIN. CLEAR WIDTH OF 60 INCHES (MEASURED PARALLEL TO THE VEHICLE ROADWAY) TO THE MAXIMUM EXTENT ALLOWED BY LEGAL OR SITE CONSTRAINTS; AND SHALL BE CONNECTED TO STREETS, SIDEWALK OR PEDESTRIAN PATHS BY AN ACCESSIBLE ROUTE COMPLYING WITH TAS. THE SLOPE OF THE PAD PARALLEL TO THE ROADWAY SHALL, TO THE EXTENT PRACTICABLE, BE THE SAME AS THE ROADWAY. FOR WATER DRAINAGE A MAXIMUM SLOPE OF 1:50 (2%) PERPENDICULAR TO THE ROADWAY IS ALLOWED.

TITLE 19 - SUBDIVISION ORDINANCE

ENGINEERING DEPARTMENT

DESIGN STANDARDS FOR CONSTRUCTION

CONCRETE BUS PAD (PROPOSED PAVEMENT)

3-20

Approved By R. A. SHUBERT	Checked By H. M. E.
Date JUNE 03, 2008	Drawn By QEC / J. R.

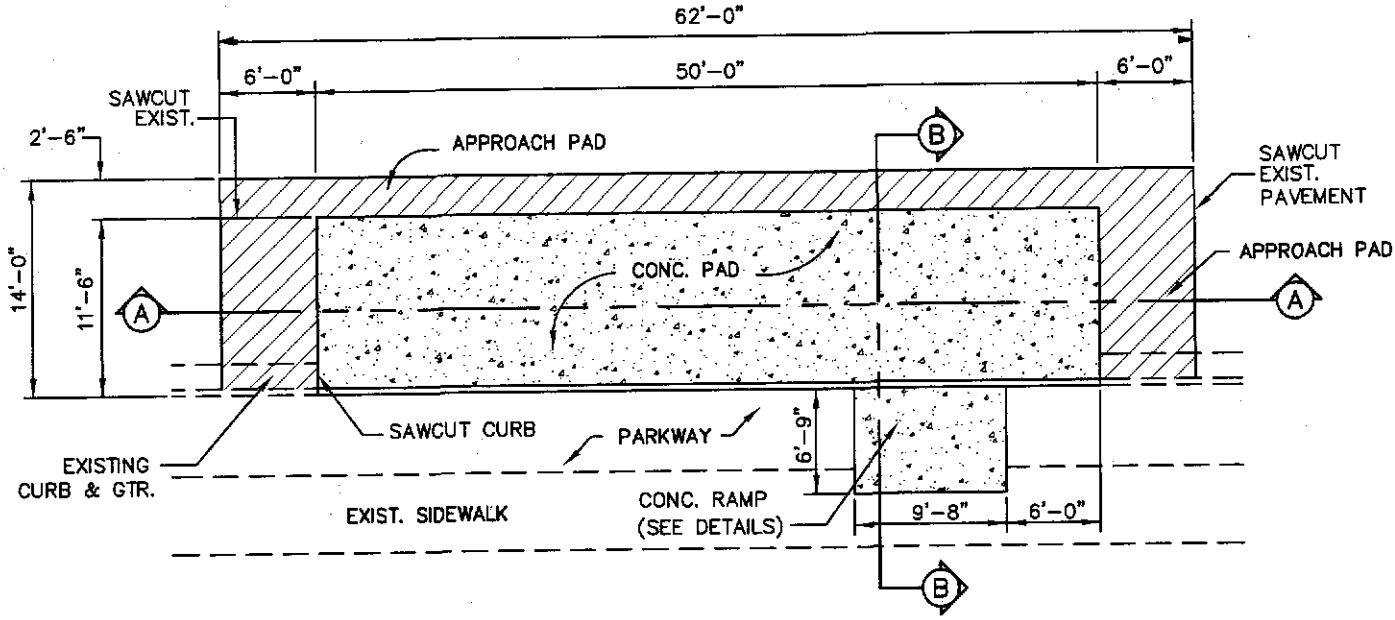

PLAN : CONC. BUS PAD

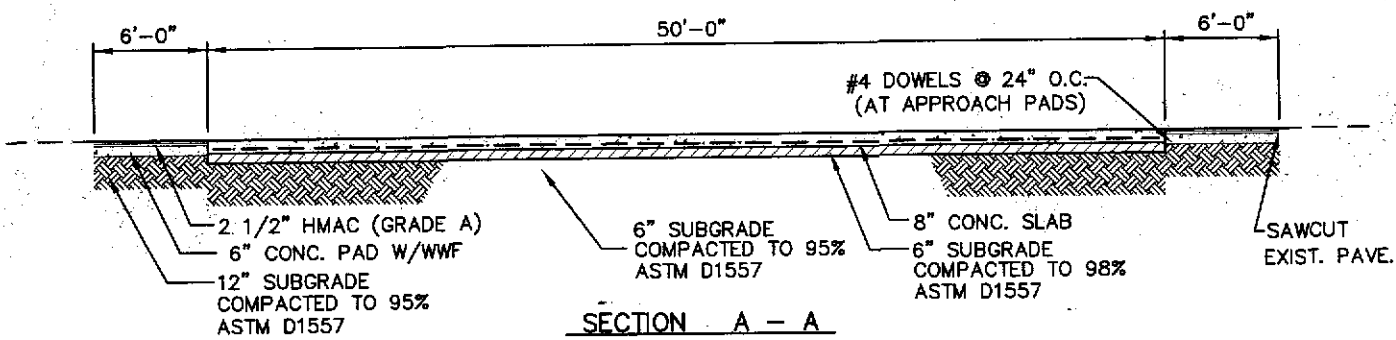

SECTION A – A

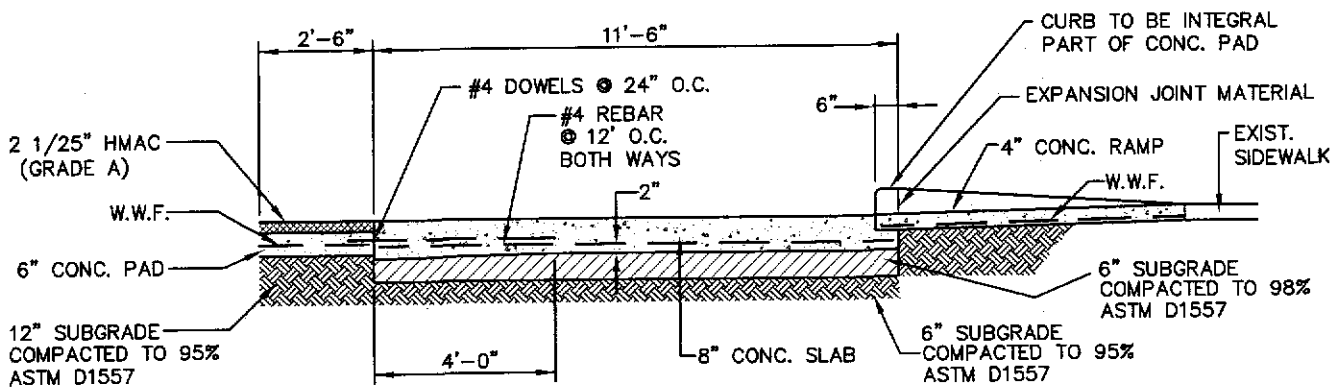

SECTION B – B

TITLE 19 - SUBDIVISION ORDINANCE

ENGINEERING DEPARTMENT

DESIGN STANDARDS FOR CONSTRUCTION

CONCRETE BUS PAD (EXISTING PAVEMENT)

3-21

Approved By R. A. SHUBERT	Checked By H. M. E.
Date JUNE 03, 2008	Drawn By QEC / J. R.

PAVEMENT THICKNESS DESIGN PROCEDURE

THE FOLLOWING PROCEDURES WILL BE USED FOR ALL CITY OF EL PASO STREET PAVING PROJECTS, INCLUDING THOSE CONTRACTED BY THE CITY AND THOSE CONTRACTED BY THE DEVELOPER WITHIN A DISTANCE OF 5 MILES OUTSIDE THE CITY LIMITS. THE SOIL STUDY ANALYSIS REPORT FOR ALL PROJECTS SHALL INCLUDE THE FOLLOWING:

1. ESTABLISH CLASSIFICATION OF SUBGRADE SOILS.

   A. DRILL SOIL BORINGS WITH STANDARD PENETRATION TESTS (SURFACE AND 2-1/2 FOOT INTERVALS) TO 6.5 FT BELOW PAVING SUBGRADE AT LOCATIONS DETEMINED BY THE CITY ENGINEER OR AT INTERVALS NOT TO EXCEED 800 FT. WITH A MINIMUM OF 2 SOIL BORINGS PER PROJECT.

   B. OBSERVE AND LOG SAMPLES TO IDENTIFY SOILS IN ACCORDANCE WITH THE UNIFIED SOIL CLASSIFICATION SYSTEM.

   C. OBSERVE AND REPORT FREE GROUNDWATER CONDITIONS.

2. ESTABLISH INDEX PROPERTIES OF SUBGRADE.

   A. MAKE TESTS TO DETERMINE ATTERBERG LIMITS AND PERCENT OF SOIL PASSING 200-MESH SIEVE FOR EACH MAJOR SOIL TYPE.

   B. DETERMINE GRAIN SIZE CURVES FOR COARSE GRAINED SOILS BY SIEVE ANALYSIS.

PAVEMENT THICKNESS DESIGN PROCEDURE
(continued)

3. ESTABLISH IN-PLACE CONDITIONS AND STRENGTH OF SUBGRADE.

   A. DETERMINE MOISTURE CONTENTS AND UNIT DRY WEIGHTS OF UNDISTURBED AND/OR RELATIVELY UNDISTURBED SAMPLES OF SOILS.

   B. DETERMINE STRENGTH OF COHESIVE SOILS BY UNCONFINED COMPRESSION TESTS ON SELECTED UNDISTURBED SHELBY TUBE SAMPLES.

4. OBTAIN STRENGTH OF SUBGRADE SOILS.

   A. USE THE CALIFORNIA BEARING RATION (CBR). CBR VALUES SHALL BE OBTAINED BY TEST METHODS OUTLINED IN EITHER ASHTO T193 OR ASTM D1883.

5. DETERMINE THICKNESS OF BASE MATERIALS AND PAVEMENT IN ACCORDANCE WITH AASHTO INTERIM GUIDE FOR DESIGN OF PAVEMENT STRUCTURES 1972, CHAPTER III, REVISED 1981; PUBLISHED BY: AMERICAN ASSOCIATION OF STATE HIGHWAY AND TRANSPORTATION OFFICIALS, 444 N. CAPITAL STREET, N.W. SUITE 225, WASHINGTON, D.C. 20001.

   A. THE NECESSARY DESIGN DATA FOR HOT MIXED ASPHALTIC CONCRETE PAVEMENTS MUST BE OBTAINED AND USED AS FOLLOWS:

      1. TERMINAL SERVICEABILITY INDEX (PT) MUST BE 2.0.

      2. EQUIVALENT 18-KIP SINGLE-AXLE LOADS (EAL) MUST BE OBTAINED FROM TABLE 1, STREET DESIGN CRITERIA, DESIGN STANDARD SHEET NO. 3-25. THE DEPARTMENT OF ENGINEERING SHALL DETERMINE APPLICABLE STREET CLASSIFICATION.

PAVEMENT THICKNESS DESIGN PROCEDURE
(continued)

3. SOIL SUPPORT VALUE (S) MUST BE DETERMINED FROM FIGURE 1 ATTACHED. SOIL STRENGTH VALUES MUST BE AS OBTAINED FROM CBR TESTS.

4. REGIONAL FACTOR (R) MUST BE 0.5.

5. STRUCTURAL NUMBER (SN) MUST BE DETERMINED FROM THE NOMOGRAPH, FIGURE 2. ATTACHED.

6. LAYER COEFFICIENT (A_1, A_2, A_3) MUST BE ESTABLISHED FROM TABLE 2. (ATTACHED).

7. USE THE FOLLOWING EQUATION TO DETERMINE THE MOST EFFICIENT PAVEMENT STRUCTURE.

$$SN = A_1 D_1 + A_2 D_2 + A_3 D_3$$

WHERE D_1 = THICKNESS OF SURFACE COURSE
D_2 = THICKNESS OF BASE COURSE
D_3 = THICKNESS OF SUBBASE COURSE

PAVEMENT THICKNESS DESIGN PROCEDURE
(continued)

DEFINITIONS:

CALIFORNIA BEARING RATION (CBR) - THIS IS A MEASURE OF THE STRENGTH OF A SOIL AS DETERMINED BY FORCING A 3 SQUARE INCH PLUNGER INTO A CYLINDER OF THE SOIL. CBR VALUES MAY RANGE FROM 1-100.

TERMINAL SERVICEABILITY INDEX (PT) - THE SERVICEABILITY OF A PAVEMENT IS DEFINED AS THE ABILITY TO SERVE HIGH-SPEED, HIGH VOLUME AUTOMOBILE AND TRUCK TRAFFIC AND IS MEASURED BY USE OF AN INDEX. THE PT IS THE LOWEST INDEX THAT WILL BE TOLERATED BEFORE RESURFACING OR RECONSTRUCTION BECOMES NECESSARY. FOR EL PASO, THE PT MUST BE 2.0.

EQUIVALENT 18-KIP SINGLE AXLE LOADS (EAL) - TO ASSESS TRAFFIC LOADS, THE VARYING AXLE LOADS OF DIFFERENT VEHICLES ARE CONVERTED TO A COMMON UNIT. IN THIS PROCEDURE THE 18 KIP SINGLE AXLE LOAD IS USED.

SOIL SUPPORT VALUE (S) - AN INDEX NUMBER WHICH EXPRESSES THE ABILITY OF A SOIL OR AGGREGATE MIXTURE TO SUPPORT TRAFFIC LOADS THROUGH A FLEXIBLE PAVEMENT STRUCTURE.

REGIONAL FACTOR (R) - A NUMERICAL FACTOR THAT IS USED TO ADJUST THE STRUCTURAL NUMBER FOR CLIMATIC AND ENVIRONMENTAL CONDITIONS. FOR EL PASO, THE (R) MUST BE 0.5.

STRUCTURAL NUMBER (SN) - AN INDEX NUMBER DERIVED FROM AN ANALYSIS OF TRAFFIC, SUBGRADE SOIL CONDITIONS, AND REGIONAL FACTOR WHICH MAY BE CONVERTED TO THICKNESS OF FLEXIBLE PAVEMENT LAYERS THROUGH THE USE OF SUITABLE LAYER COEFFICIENTS RELATED TO THE TYPE OF MATERIAL BEING USED IN EACH LAYER OF THE PAVEMENT STRUCTURE.

LAYER COEFFICIENTS - A NUMBER WHICH RELATES SN AND THICKNESS .

A_1 REPRESENTS THE SURFACE COURSE.
A_2 REPRESENTS THE BASE COURSE.
A_3 REPRESENTS THE SUBBASE COURSE.

PAVEMENT THICKNESS DESIGN PROCEDURE
(continued)

EXAMPLE:

DESIGN A PAVEMENT STRUCTURE FOR A 36' ROADWAY WITH CBR = 12, 85% COMPACTED SUBGRADE, ASTM D1557.

A. $P_t = 2.0$

B. CITY ENGINEER DETERMINES THIS STREET IS A RESIDENTIAL COLLECTOR ACCORDING TO TABLE 1. THEREFORE, EAL=269,000

C. FROM FIGURE 1, WITH CBR = 12 , S = 6.35

D. R = 0.5

E. FROM FIGURE 2, SN = 1.70

F. FROM TABLE 2 , $a_1 = 0.44$, $a_2 = 0.14$, $a_3 = 0.11$

G. USE $D_1 = 2"$, $D_3 = 6$ IN EQU -1 AND SOLVE FOR D_2

$$1.70 = (0.44)(2) + (0.14)D_2 + (0.11)(6)$$

$$D_2 = 1.14"$$

EXAMPLE:

MINIMUM "D" FOR RESIDENTIAL SUBCOLLECTOR ACCESS STREET IS 4 1/2". THIS PAVEMENT STRUCTURE WOULD CONSIST OF 2" H.M.A.C., 4 1/2" C.S.B. AND 6" COMPACTED SUB-BASE

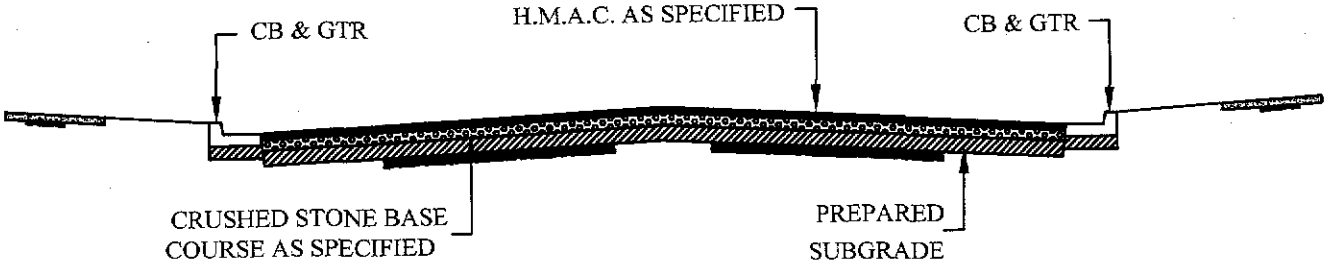

TYPICAL ROAD SECTION

PAVEMENT THICKNESS DESIGN CHART

STREET CLASSIFICATION	AVERAGE DAILY TRAFFIC	ROADWAY WIDTH (FT.)	ROW WIDTH (FT.)	MINIMUM PAVEMENT THICKNESS (IN.) ** HMAC
E.A.L.	CSB (20 YRS)			SUBGRADE
ALLEY	200 45,000	14 OR 20	14 OR 20	1-1/2 4-1/2 6
TWENTY FOOT (20') RESIDENTIAL LANE - NO PARKING	200 45,000	20	40	1-1/2 6 8
THIRTY-TWO FOOT (32') RESIDENTIAL LANE - NO PARKING	500 45,000	32	50	1-1/2 6 8
THIRTY-SIX FOOT (36') RESIDENTIAL 1 LANE	3,000 269,000	36	56	1-1/2 6 8
TWENTY-EIGHT FOOT (28') RESIDENTIAL 2 LANE	3,000 269,000	28	46	1-1/2 6 8
RESIDENTIAL COLLECTOR - WITH PARKING	3,000 269,000	36	54	1-1/2 6 8
RESIDENTIAL COLLECTOR WITH MEDIAN	3,000 269,000	36	54	1-1/2 6 8
MOUNTAIN RESIDENTIAL	500 * 45,000	20	23	1-1/2 4-1/2 6
DIVIDED MOUNTAIN RESIDENTIAL	500 * 45,000	20	VARIES	1-1/2 4-1/2 6
MULTI-FAMILY/ COMMERCIAL/ INDUSTRIAL LOCAL STREET 1	6,000 * 630,000	44	64	2 8 10

PAVEMENT THICKNESS DESIGN CHART
(continued)

STREET CLASSIFICATION	AVERAGE DAILY TRAFFIC E.A.L. (20 YRS)	ROADWAY WIDTH (FT.)	ROW WIDTH (FT.)	MINIMUM PAVEMENT THICKNESS (IN.) ** HMAC CSB SUBGRADE
MULTI-FAMILY/ COMMERCIAL/ INDUSTRIAL LOCAL STREET 2	6,000 * 630,000	36	56	2 8 10
NON-RESIDENTIAL COLLECTOR	6,000 * 630,000	50	70	2 8 10
NON-RESIDENTIAL COLLECTOR WITH BIKE LANES	6,000 * 630,000	62	82	2-1/2 8 10
BOULEVARD	14,000 * 1,300,000	44	120	2-1/2 10 12
MINOR ARTERIAL	14,000 * 1,500,000	58	78	2-1/2 8 10
MINOR ARTERIAL W/BIKE LANES	14,000 * 1,500,000	58	88	2-1/2 8 10
MAJOR ARTERIAL	26,000 * 3,100,000	66	110	2-1/2 10 12
MAJOR ARTERIAL W/BIKE LANES	26,000 * 3,100,000	66	120	2-1/2 10 12

* ADT FOR PURPOSES OF ESTIMATING AXLE LOADS ONLY

** IF THE RESULTS FOR "CBR" VALUES ARE HIGHER THAN THE MINIMUM PAVEMENT THICKNESS, THE HIGHER VALUES SHALL BE USED.

PAVEMENT THICKNESS DESIGN PROCEDURE				
STREET CLASSIFICATION	AVER. DAILY TRAFFIC E. A. L. (20 YRS.)	ROADWAY WIDTH (FT.)	R. O. W. WIDTH (FT.)	MINIMUM PAVEMENT THICKNESS (IN.) ** HMAC CSB SUBGRADE
COLLECTOR ARTERIAL**	7,000* 1,800,000	90	98	2 1/2 8 10
MINOR ARTERIAL**	14,000* 2,200,000	98	120	2 1/2 10 12
MAJOR ARTERIAL**	28,000* 4,600,000	98	136	2 1/2 10 12
COLLECTOR ARTERIAL** W/ BIKE LANES	7,000* 1,800,000	98	136	2 1/2 8 10
MINOR ARTERIAL** W/ BIKE LANES	14,000* 2,200,00	98	136	2 1/2 10 12
MAJOR ARTERIAL** W/ BIKE LANES	28,000* 4,600,000	98	136	2 1/2 10 12

*ADT FOR PURPOSES OF ESTIMATING AXLE LOADS ONLY.

**MINIMUM PAVEMENT THICKNESS FOR ARTERIAL STREETS, WITHIN HEAVY COMMERCIAL AND INDUSTRIAL DEVELOPMENTS (PROPERTIES ZONED C-4, M-1, M-2, M-3 AND P.I.) SHALL BE SUBJECT TO THE APPROVAL OF THE CITY ENGINEER.

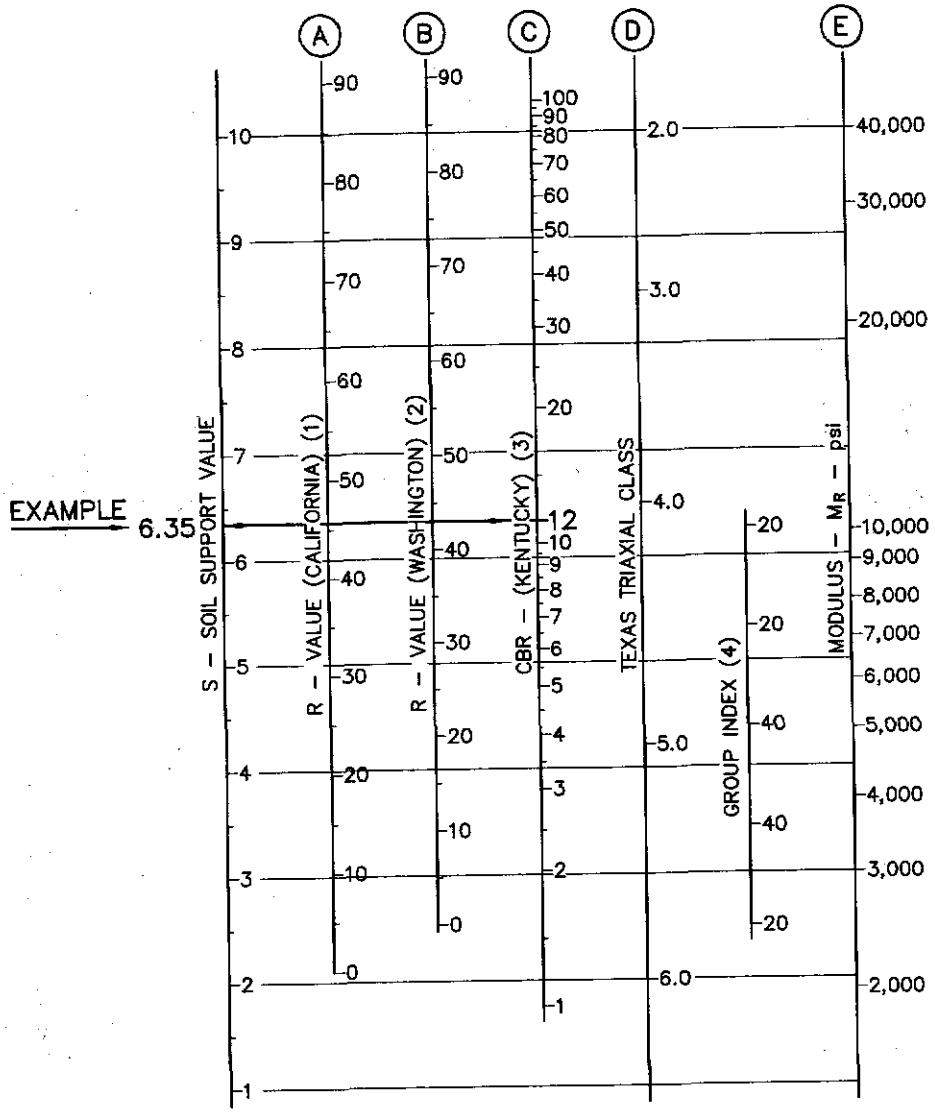

PAVEMENT THICKNESS

(1) THE CORRELATION IS WITH THE DESIGN CURVES USED BY CALIFORNIA; AASHO DESIGNATIONS T–173–60, AND EXUDATION PRESSURE IS 240 psi. SE HVEEM, F.M., AND CARMANY, R.M., "THE FACTORS UNDERLYING THE RATIONAL DESIGN OF PAVEMENTS." PROC. HRB, VOL. 28 (1948) PP. 10–136.

(2) THE CORRELATION IS WITH THE DESIGN CURVES USED BY WASHINGTON DEPT. OF HIGHWAYS; EXUDATION PRESSURE IS 300 psi. SEE "FLEXIBLE PAVEMENT DESIGN CORRELATION STUDY." HRB BULL. 133 (1956).

(3) THE CORRELATION IS WITH THE CBR DESIGN CURVES BY KENTUCKY. SEE DRAKE, W.B., AND HAVENS, J.H., "RE–EVALUATION OF KENTUCKY FLEXIBLE PAVEMENT DESIGN CRITERION." HRB BULL. 233 (1959) PP. 33–56. THE FOLLOWING CONDITIONS APPLY TO THE LABORATORY–MODIFIED CBR: SPECIMEN IS TO BE MOLDED AT OR NEAR THE OPTIMUM MOISTURE CONTENT AS DETERMINED BY AASHTO T–99; DYNAMIC COMPACTION IS TO BE USED WITH A HAMMER WEIGHT OF 10 LB. DROPPED FROM A HEIGHT OF 18 IN.; SPECIMEN IS TO BE COMPACTED IN FIVE EQUAL LAYERS WITH EACH LAYER RECEIVING 10 BLOWS; SPECIMEN IS TO BE SOAKED FOR 4 DAYS.

(4) THIS SCALE HAS BEEN DEVELOPED BY COMPARISON BETWEEN THE CALIFORNIA R–VALUE AND THE GROUP INDEX DETERMINED BY THE PROCEDURE IN PROC. HRB VOL. 25 (1945) PP. 376–392.

FIGURE I

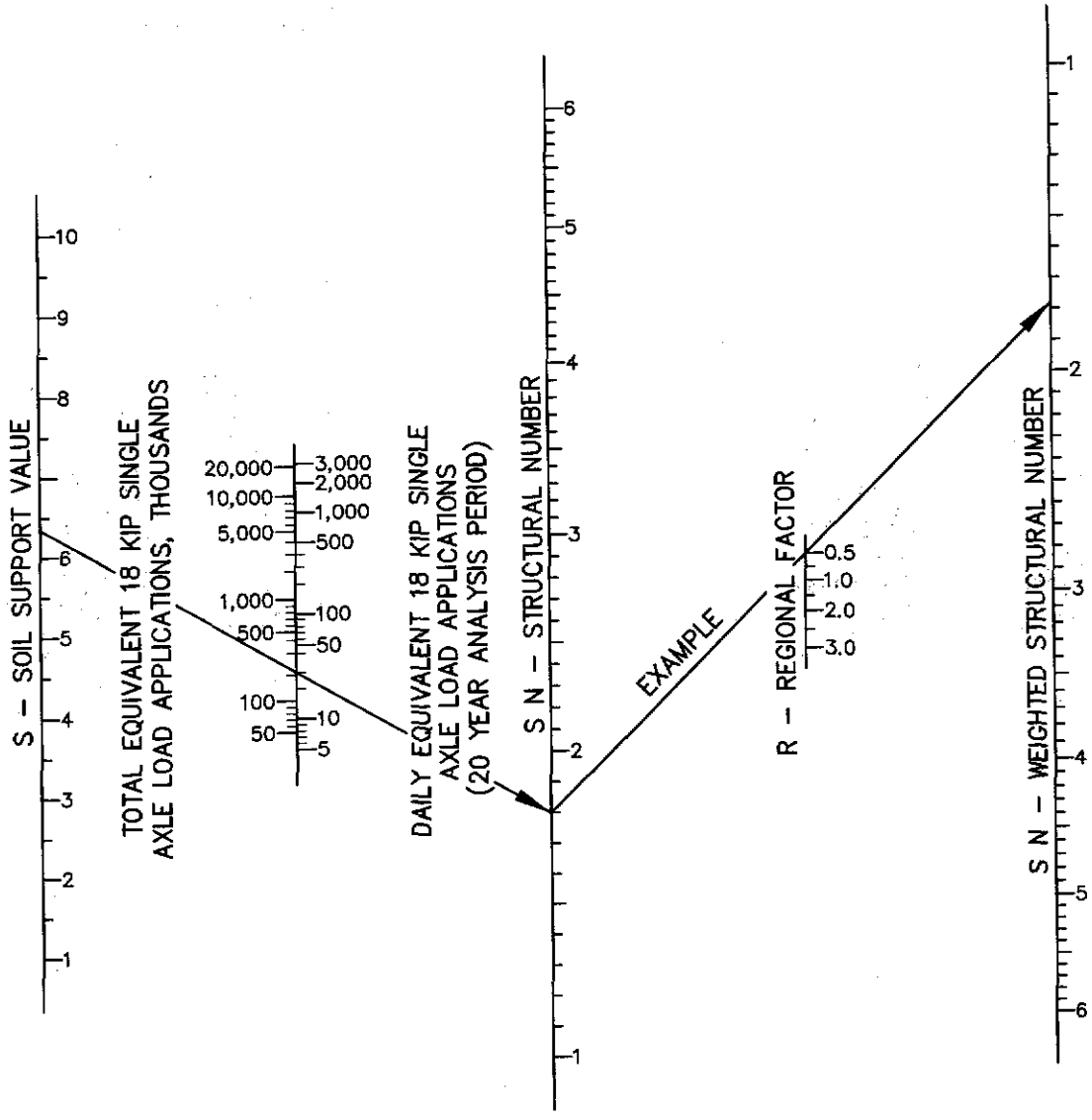

STRUCTURAL NUMBER FOR Pt = 20
FIGURE 2

PAVEMENT COMPONENT	COEFFICIENT[3]
SURFACE COURSE	
ROADMIX (LOW STABILITY)	0.20
PLANTMIX (HIGH STABILITY)	0.44* ← EXAMPLE
SAND ASPHALT	0.40
BASE COURSE	
SANDY GRAVEL	0.07[2] ← EXAMPLE
CRUSHED STONE	0.14
CEMENT-TREATED (NO SOIL - CEMENT)	
COMPRESSIVE STRENGTH @ 7 DAYS	
650 PSI OR MORE (4.48 MPA)	0.23[2]
400 TO 650 PSI (2.76 TO 4.48 MPA)	0.20
400 PSI OR LESS (2.76 MPA)	0.15
BITUMINOUS - TREATED	
COARSE - GRADED	0.34[2]
SAND ASPHALT	0.30
LIME - TREATED	0.15 - 0.30
SUBBASE COURSE	
SANDY GRAVEL	0.11* ← EXAMPLE
SAND OR SANDY-CLAY	0.15 - 0.10

LAYER COEFFICIENTS
TABLE 2

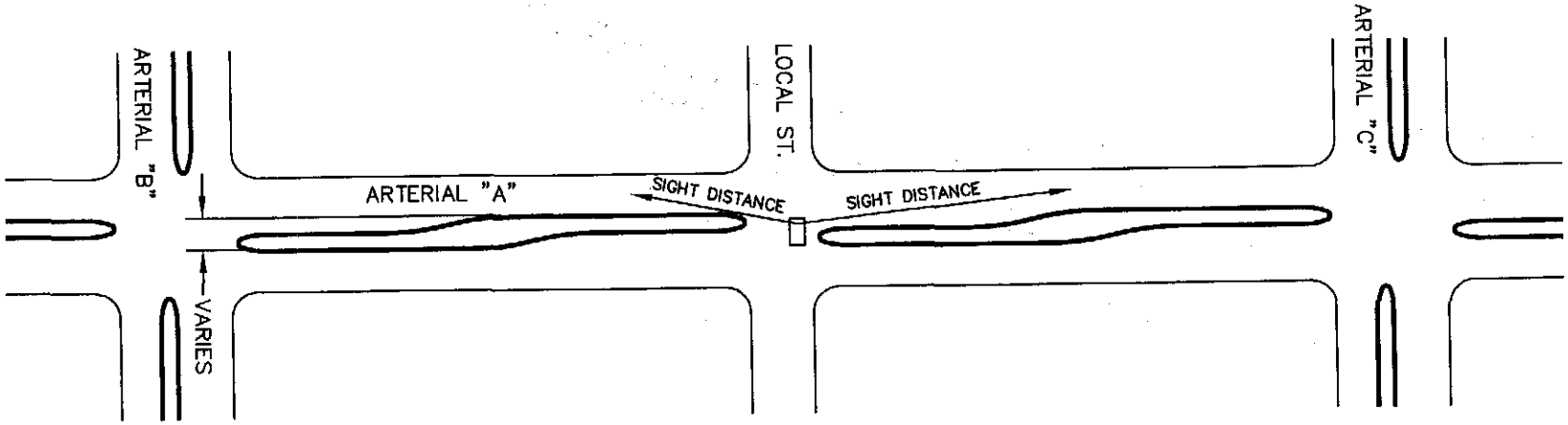

MEDIAN OPENING SIGHT DISTANCE

(2-STOP CROSSING)

NOTE:

MINIMUM SIGHT DISTANCE REQUIRED AT MEDIAN OPENINGS WHERE THE CROSSROAD IS CONTROLLED BY STOP SIGNS SHALL BE AS SHOWN BELOW; OTHER APPLICATIONS SHALL COMPLY WITH AASHTO REQUIREMENTS.

MEDIAN GREATER THAN OR EQUAL TO 20 FEET (2–STOP CROSSING)

ARTERIAL DESIGN SPEED	30 MPH	35 MPH	40 MPH	45 MPH	50 MPH
2 LANES (20'–24')	390	455	520	585	650
3 LANES (32'–36')	435	505	580	650	725
4 LANES (40'–48')	450	525	600	675	750

VERTICAL SIGHT DISTANCE SHALL BE MEASURED FROM A DRIVER'S EYE LEVEL (3.5 FEET) TO THE TOP OF AN ONCOMING CAR (4.5 FEET).

NO MEDIAN OPENING SHALL BE LOCATED WHERE THE GRADE BETWEEN THE LANES ON OPPOSITE SIDES OF THE MEDIAN EXCEEDS 11%.

TITLE 19 - SUBDIVISION ORDINANCE

ENGINEERING DEPARTMENT

DESIGN STANDARDS FOR CONSTRUCTION

MEDIAN OPENING SIGHT DISTANCE (2-STOP CROSSING)

3-30

Approved By R. A. SHUBERT Checked By H. M. E.

Date JUNE 03, 2008 Drawn By QEC / J. R.

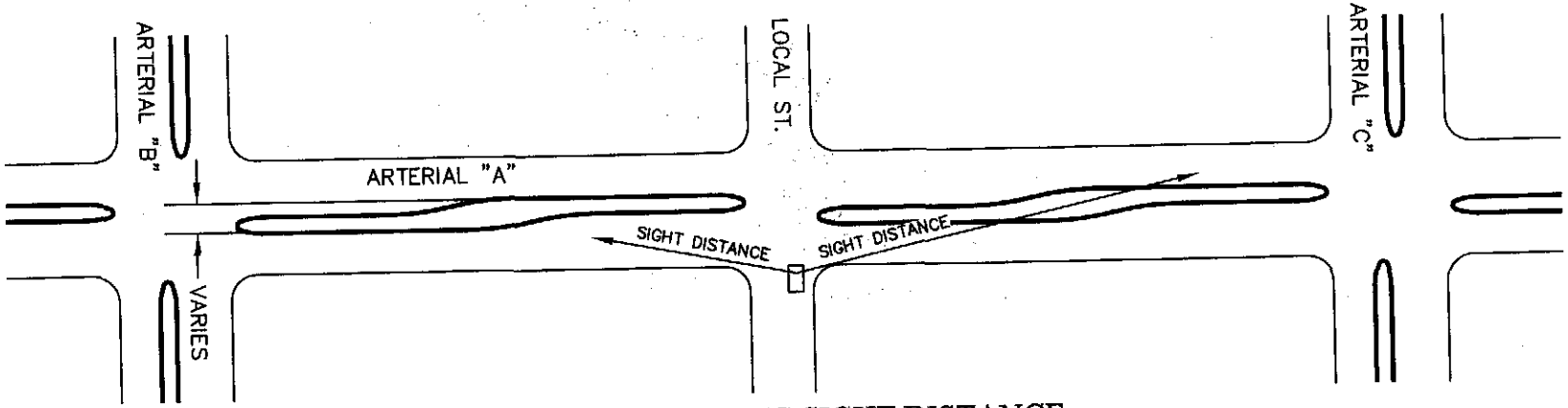

MEDIAN OPENING SIGHT DISTANCE

(1-STOP CROSSING)

NOTE:

MINIMUM SIGHT DISTANCE REQUIRED AT MEDIAN OPENINGS WHERE THE CROSSROAD IS CONTROLLED BY STOP SIGNS SHALL BE AS SHOWN BELOW; OTHER APPLICATIONS SHALL COMPLY WITH AASHTO REQUIREMENTS.

MEDIAN LESS THAN 20 FEET (1–STOP CROSSING)

ARTERIAL DESIGN SPEED	30 MPH	35 MPH	40 MPH	45 MPH	50 MPH
4 LANES (40'–48')	485	565	645	730	810
6 LANES (64'–72')	530	620	705	795	880

VERTICAL SIGHT DISTANCE SHALL BE MEASURED FROM A DRIVER'S EYE LEVEL (3.5 FEET) TO THE TOP OF AN ONCOMING CAR (4.5 FEET).

NO MEDIAN OPENING SHALL BE LOCATED WHERE THE GRADE BETWEEN THE LANES ON OPPOSITE SIDES OF THE MEDIAN EXCEEDS 11%. OTHER APPLICATIONS FOR SIGHT DISTANCE DESIGN SHALL BE PERMITTED, PROVIDED THEY MEET AASHTO GUIDELINES.

THE CITY OF EL PASO TEXAS

TITLE 19 - SUBDIVISION ORDINANCE

ENGINEERING DEPARTMENT

DESIGN STANDARDS FOR CONSTRUCTION

MEDIAN OPENING SIGHT DISTANCE (1-STOP CROSSING)

3-31

Approved By R. A. SHUBERT Checked By H. M. E.

Date JUNE 03, 2008 Drawn By QEC/J.R.

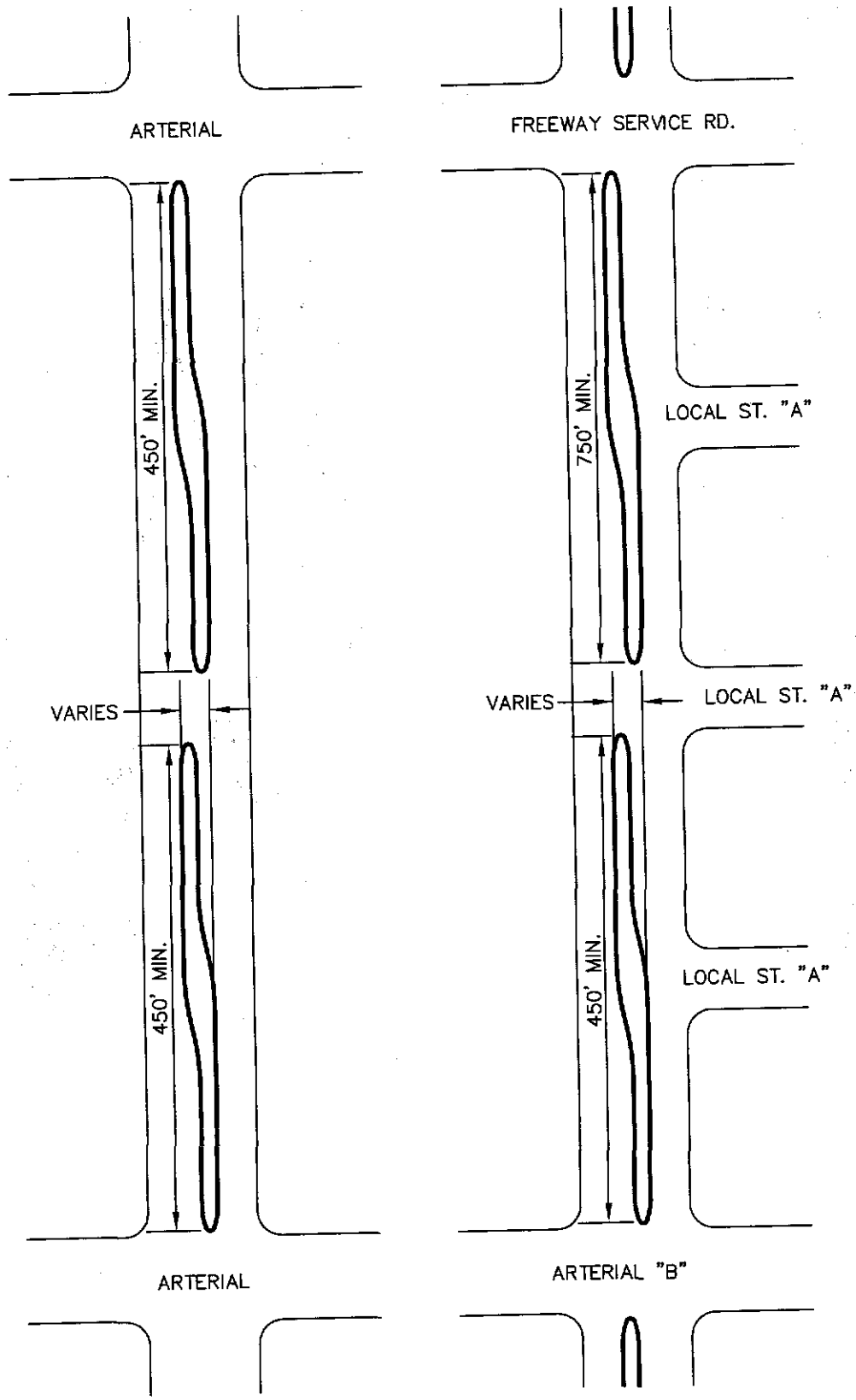

MEDIAN OPENING SPACING

NOTE:
MEDIAN OPENINGS SHALL BE LOCATED NO CLOSER THAN 450 FEET FROM ARTERIAL STREET INTERSECTIONS.
MEDIAN OPENINGS SHALL BE LOCATED NO CLOSER THAN 750 FEET FROM FREEWAY SERVICE ROAD INTERSECTIONS.

TITLE 19 - SUBDIVISION ORDINANCE

ENGINEERING DEPARTMENT

DESIGN STANDARDS FOR CONSTRUCTION

MEDIAN OPENING SPACING
3-32

Approved By R. A. SHUBERT	Checked By H. M. E.
Date JUNE 03, 2008	Drawn By QEC / J. R.

CENTERLINE STRIPING WITH BIKE LANES

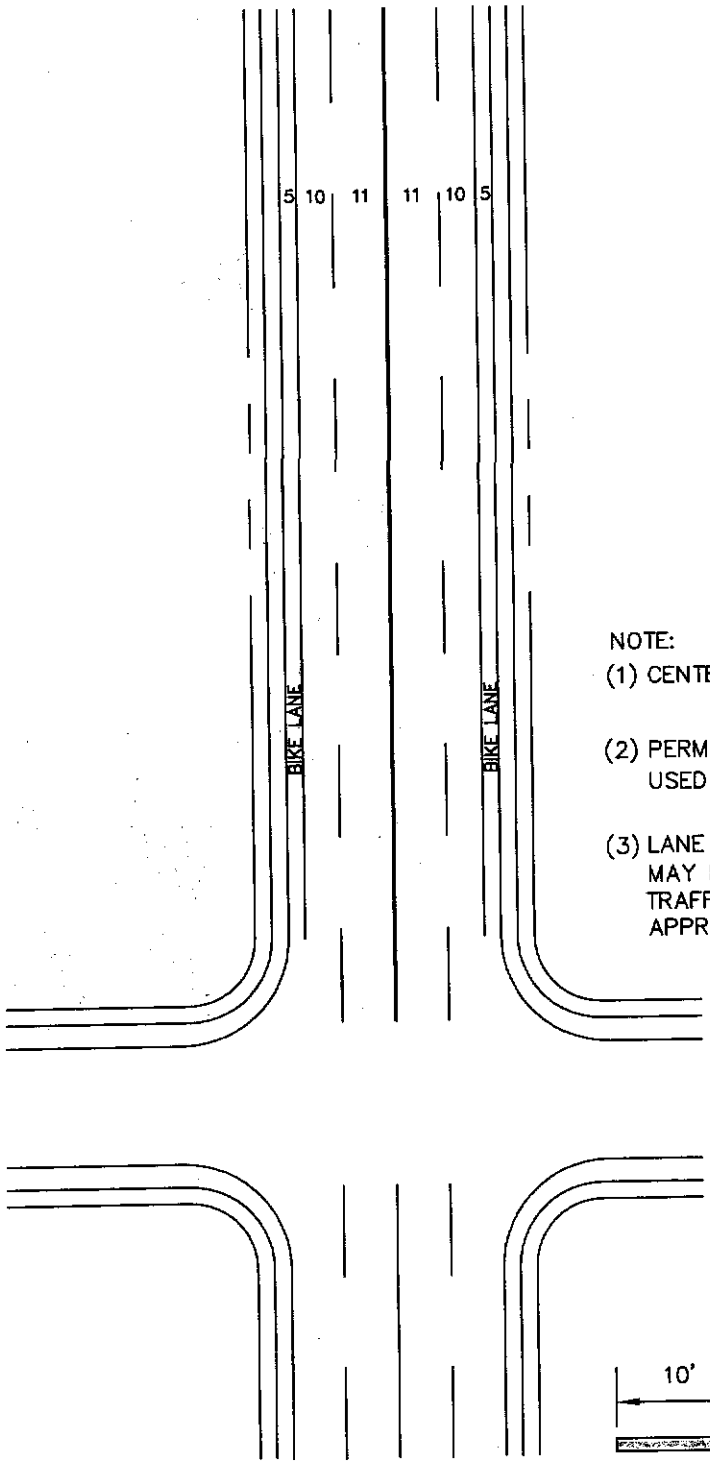

NOTE:

(1) CENTER LINE STRIPING FOR COLLECTOR ARTERIAL.

(2) PERMANENT PAVEMENT MARKING MATERIALS TO BE USED AS PER CITY SPECIFICATIONS.

(3) LANE MARKINGS TO BE FURNISHED AND INSTALLED MAY INCLUDE PERMANENT THERMO–PLASTIC MARKINGS, TRAFFIC BUTTONS OR OTHER STRIPING MATERIALS APPROVED BY THE CITY ENGINEER.

DOUBLE YELLOW LINE

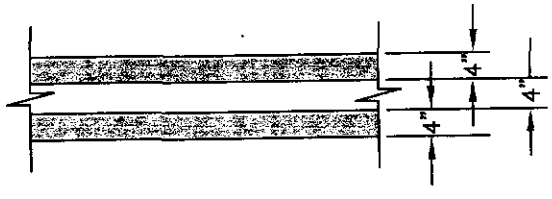

LANE LINES

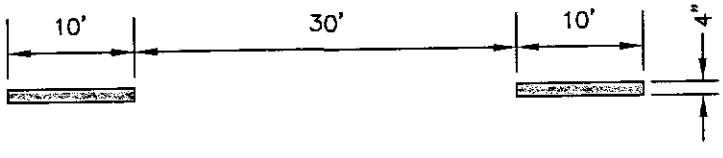

TITLE 19 - SUBDIVISION ORDINANCE

ENGINEERING DEPARTMENT

DESIGN STANDARDS FOR CONSTRUCTION

CENTERLINE STRIPING WITH BIKE LANES

3-33

Approved By R. A. SHUBERT	Checked By H. M. E.
Date JUNE 03, 2008	Drawn By QEC / J. R.

CENTERLINE STRIPING WITHOUT BIKE LANES

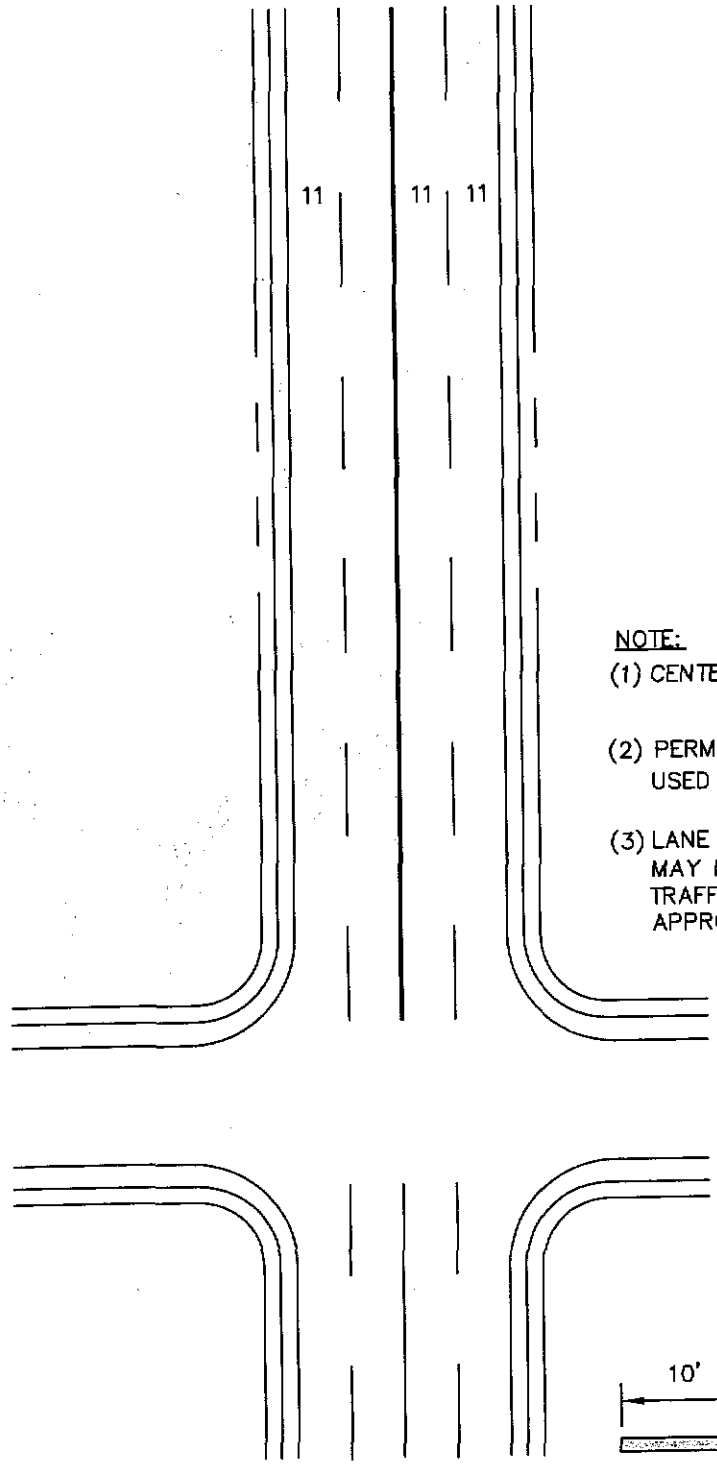

NOTE:

(1) CENTER LINE STRIPING FOR COLLECTOR ARTERIAL.

(2) PERMANENT PAVEMENT MARKING MATERIALS TO BE USED AS PER CITY SPECIFICATIONS.

(3) LANE MARKINGS TO BE FURNISHED AND INSTALLED MAY INCLUDE PERMANENT THERMO-PLASTIC MARKINGS, TRAFFIC BUTTONS OR OTHER STRIPING MATERIALS APPROVED BY THE CITY ENGINEER.

DOUBLE YELLOW LINE

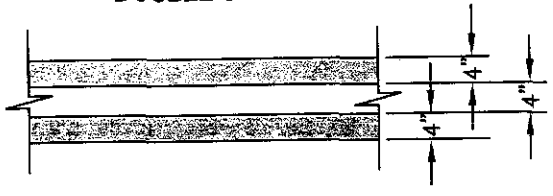

LANE LINES

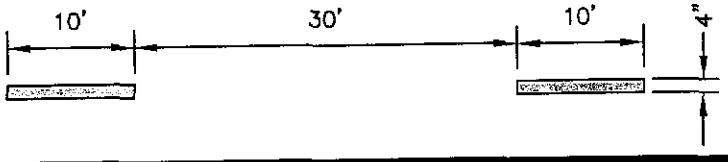

TITLE 19 - SUBDIVISION ORDINANCE

ENGINEERING DEPARTMENT

DESIGN STANDARDS FOR CONSTRUCTION

CENTERLINE STRIPING WITHOUT BIKE LANES
3-34

Approved By R. A. SHUBERT	Checked By H. M. E.
Date JUNE 03, 2008	Drawn By QEC / J. R.

MEDIAN STRIPING WITH BIKE LANES

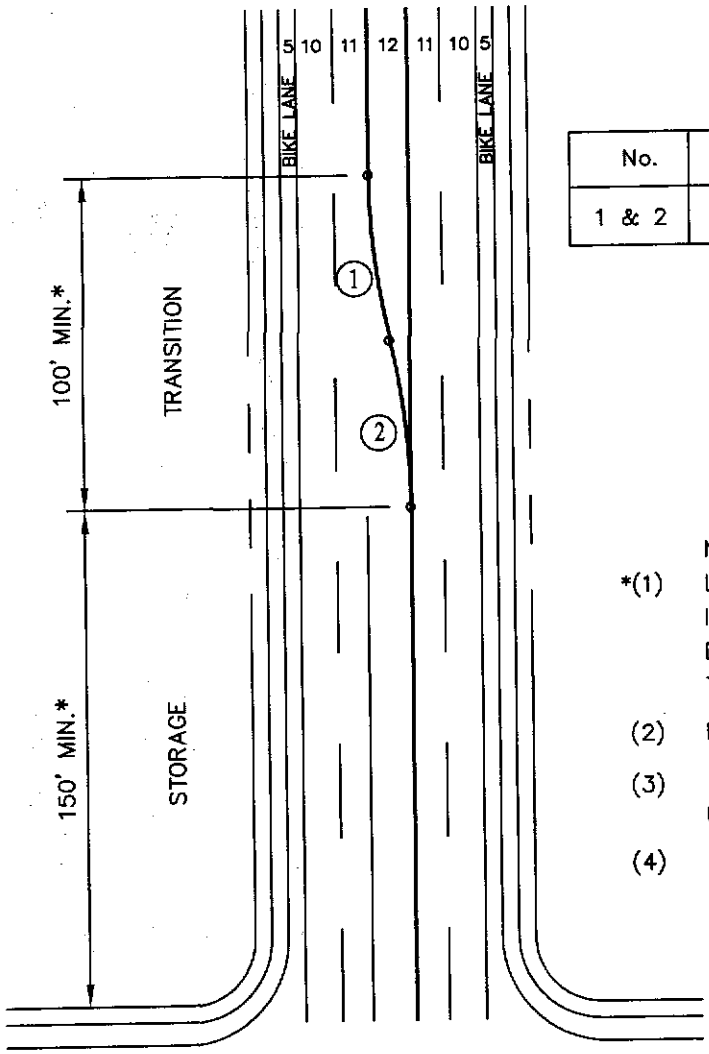

TYPICAL CURVE DATA

No.	Δ	R	L	T	CH
1 & 2	13°41'08"	211.34'	50.48'	25.36'	50.36'

$$T = R \tan \frac{\Delta}{2}$$

$$C = 2R \sin \frac{\Delta}{2} = 2T \cos \frac{\Delta}{2}$$

$$L = \frac{\Delta R \pi}{2}$$

NOTE:

*(1) LENGTH OF R, STORAGE, AND TRANSITION TO BE INCREASED BASED UPON TRAFFIC DENSITY, ROAD DESIGN, SPEED, AND PRESENCE OR ABSENCE OF TRAFFIC SIGNALS.

(2) MEDIAN STRIPING FOR MINOR ARTERIAL.

(3) PERMANENT PAVEMENT MARKING MATERIALS TO BE USED AS PER CITY SPECIFICATIONS.

(4) LANE MARKINGS TO BE FURNISHED AND INSTALLED MAY INCLUDE PERMANENT THERMO-PLASTIC MARKINGS, TRAFFIC BUTTONS OR OTHER STRIPING MATERIALS APPROVED BY THE CITY ENGINEER.

DOUBLE YELLOW LINE

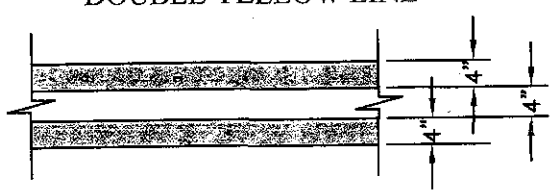

LANE LINES

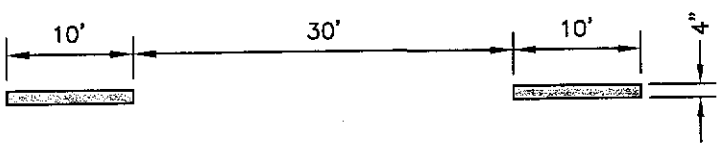

TITLE 19 - SUBDIVISION ORDINANCE

ENGINEERING DEPARTMENT

DESIGN STANDARDS FOR CONSTRUCTION

MEDIAN STRIPING WITH BIKE LANES

3-35

Approved By R. A. SHUBERT	Checked By H. M. E.
Date JUNE 03, 2008	Drawn By QEC / J. R.

MEDIAN STRIPING WITHOUT BIKE LANES

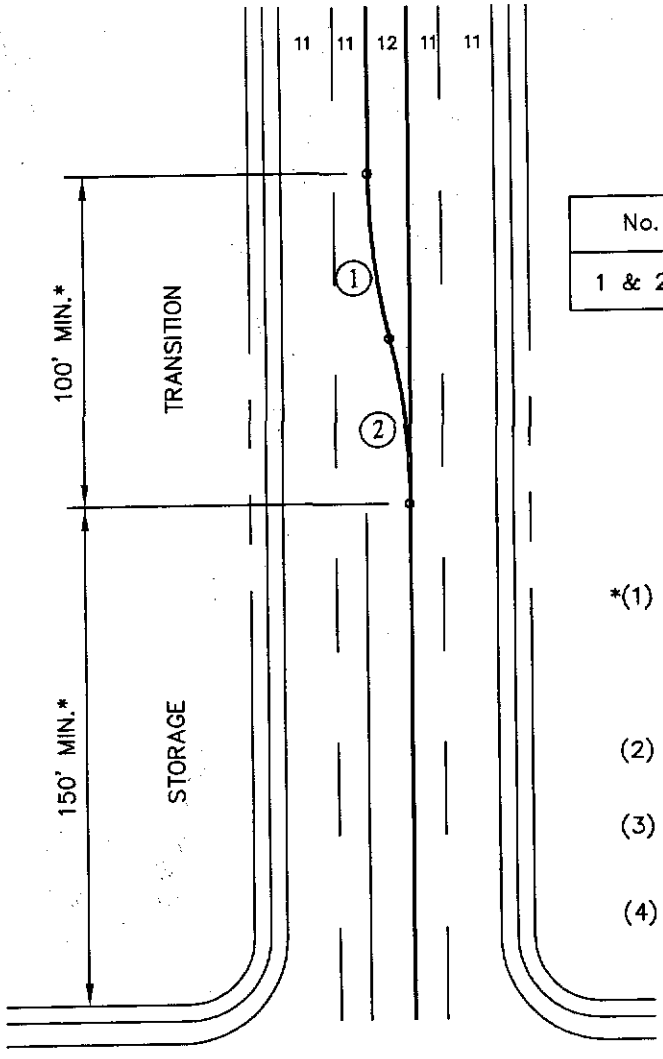

TYPICAL CURVE DATA

No.	Δ	R	L	T	CH
1 & 2	13°41'08"	211.34'	50.48'	25.36'	50.36'

$$T = R \tan \frac{\Delta}{2}$$

$$C = 2R \sin \frac{\Delta}{2} = 2T \cos \frac{\Delta}{2}$$

$$L = \frac{\Delta R \pi}{2}$$

NOTE:

*(1) LENGTH OF R, STORAGE, AND TRANSITION TO BE INCREASED BASED UPON TRAFFIC DENSITY, ROAD DESIGN, SPEED, AND PRESENCE OR ABSENCE OF TRAFFIC SIGNALS.

(2) MEDIAN STRIPING FOR MINOR ARTERIAL.

(3) PERMANENT PAVEMENT MARKING MATERIALS TO BE USED AS PER CITY SPECIFICATIONS.

(4) LANE MARKINGS TO BE FURNISHED AND INSTALLED MAY INCLUDE PERMANENT THERMO-PLASTIC MARKINGS, TRAFFIC BUTTONS OR OTHER STRIPING MATERIALS APPROVED BY THE CITY ENGINEER.

DOUBLE YELLOW LINE

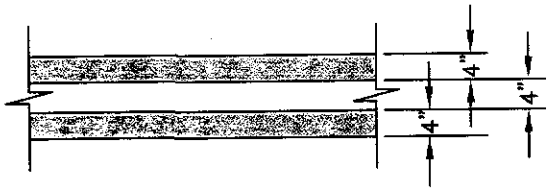

LANE LINES

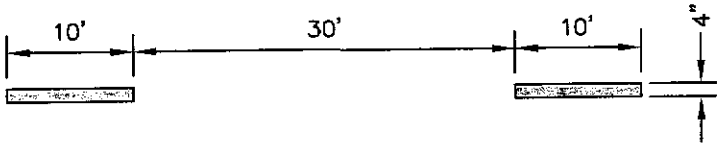

TITLE 19 - SUBDIVISION ORDINANCE

ENGINEERING DEPARTMENT

DESIGN STANDARDS FOR CONSTRUCTION

MEDIAN STRIPING WITHOUT BIKE LANES

3-36

Approved By R. A. SHUBERT
Date JUNE 03, 2008

Checked By H. M. E.
Drawn By QEC / J. R.

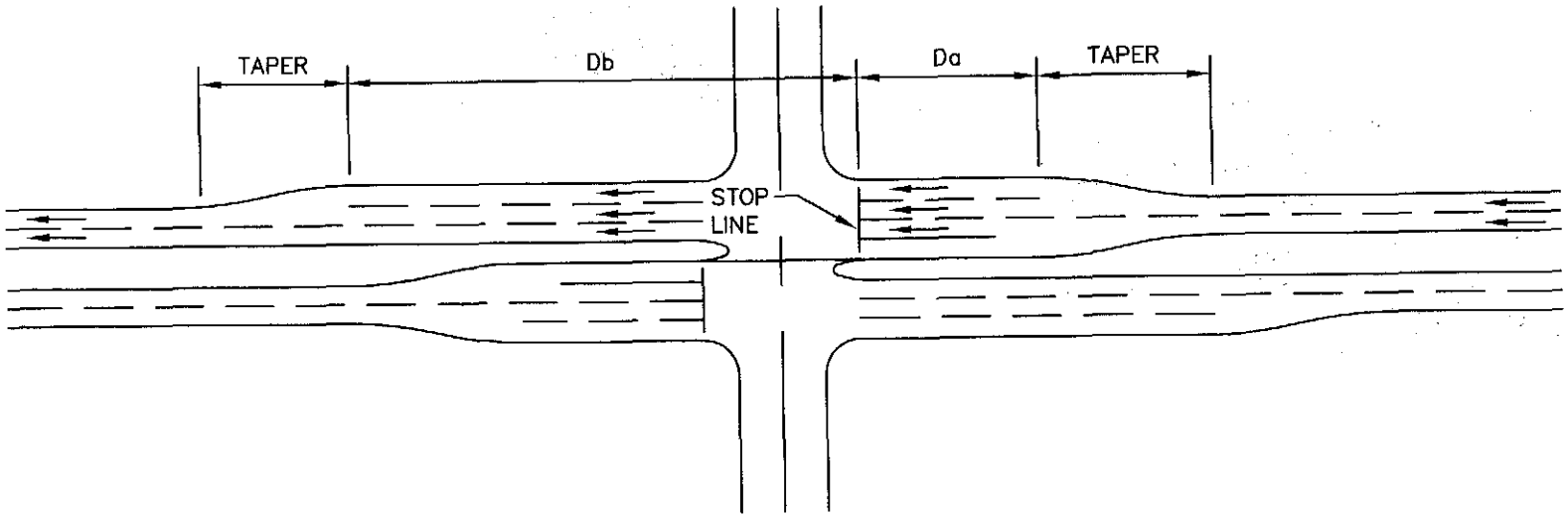

LENGTH OF WIDENING BEYOND INTERSECTION

LENGTH REQUIRED FOR ACCELERATION		
DESIGN SPEED (MPH)	Db (FEET)	TAPER (FEET)
40	200	200
45	375	225
50	525	250

LENGTH OF WIDENING IN ADVANCE OF INTERSECTION

LENGTH REQUIRED FOR DECELERATION		
DESIGN SPEED (MPH)	Da (FEET)	TAPER (FEET)
40	150	175
45	175	200
50	200	225

LENGTH REQUIREMENTS FOR ACCELERATION AND DECELERATION TURNING LANE

THE CITY OF EL PASO TEXAS

TITLE 19 - SUBDIVISION ORDINANCE

ENGINEERING DEPARTMENT

DESIGN STANDARDS FOR CONSTRUCTION

ACCELERATION AND DECELERATION LANES

3-37

Approved By R. A. SHUBERT
Date JUNE 03, 2008

Checked By H. M. E.
Drawn By QEC / I. R.

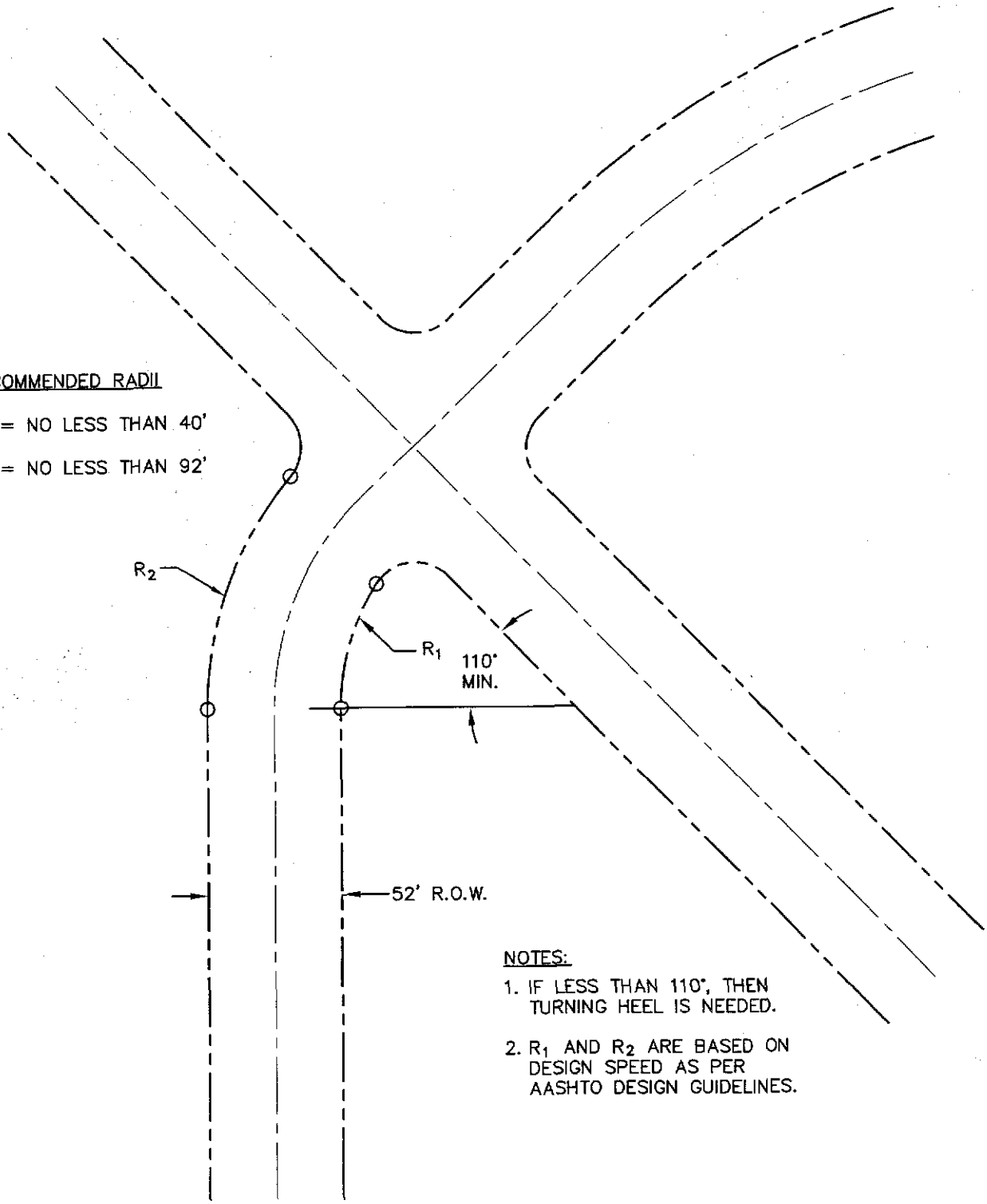

NOTES:

1. IF LESS THAN 110°, THEN TURNING HEEL IS NEEDED.
2. R_1 AND R_2 ARE BASED ON DESIGN SPEED AS PER AASHTO DESIGN GUIDELINES.

TITLE 19 - SUBDIVISION ORDINANCE

ENGINEERING DEPARTMENT

DESIGN STANDARDS FOR CONSTRUCTION

MINIMUM RADII AT INTERSECTION APPROACH

3-38

Approved By R. A. SHUBERT	Checked By H. M. E.
Date JUNE 03, 2008	Drawn By QEC / J. R.

INTERSECTION DESIGN

1. STREETS SHALL BE LAID OUT SO AS TO INTERSECT AS NEARLY AS POSSIBLE AT RIGHT ANGLES. NO INTERSECTION SHALL BE LESS THAN AN INCLUDED ANGLE OF SEVENTY DEGREES AND NO MORE THAN ONE HUNDRED TEN DEGREES.

2. THE RIGHT-OF-WAY LINE AT STREET INTERSECTIONS SHALL HAVE A MINIMUM RADIUS OF TWENTY (20) FEET.

3. WHERE PARALLEL STREETS INTERSECT ANOTHER STREET, THE CENTERLINE OF THOSE STREETS SHALL BE OFFSET A MINIMUM OF ONE HUNDRED TWENTY (120) FEET. THIS OFFSET SHALL NOT APPLY TO MINOR ARTERIAL STREETS INTERSECTING A HIGHER ORDER ARTERIAL, IF A RAISED MEDIAN IS PROVIDED AND NO MEDIAN OPENING IS ALIGNED WITH OR RAISED BETWEEN THE OFFSET STREETS. FUTURE MEDIAN OPENINGS SHALL NOT BE PERMITTED WHERE TWO (2) MINOR ARTERIAL STREETS OFFSET AND INTERSECT A MAJOR ARTERIAL STREET AT A DISTANCE OF LESS THAN ONE HUNDRED TWENTY(120) FEET; PROVIDED, HOWEVER MEDIAN OPENINGS MAY BE ALLOWED FOR ONEWAY TRAFFIC CIRCULATION SUBJECT TO THE APPROVAL OF THE DIRECTOR OF TRAFFIC AND TRANSPORTATION DEPT.

GEOMETRIC DESIGN OF ROADWAYS

DESIGN SPEED (m.p.h.)	HORIZONTAL ALIGNMENT MINIMUM CURVE RADIUS (ft)	VERTICAL ALIGNMENT RATE OF VERTICAL CURVATURE (K–VALUE)		INTERSECTION SIGHT DISTANCE MINIMUM SIGHT DISTANCE (ft)
		CREST	SAG	
15	180	20	30	125
25	(INFORMATION TO BE INCORPORATED AT A LATER DATE)			
30	300	30	40	325
35	475	50	50	400
40	675	80	70	500
45	1,100	120	90	500
50	1,400	160	110	600

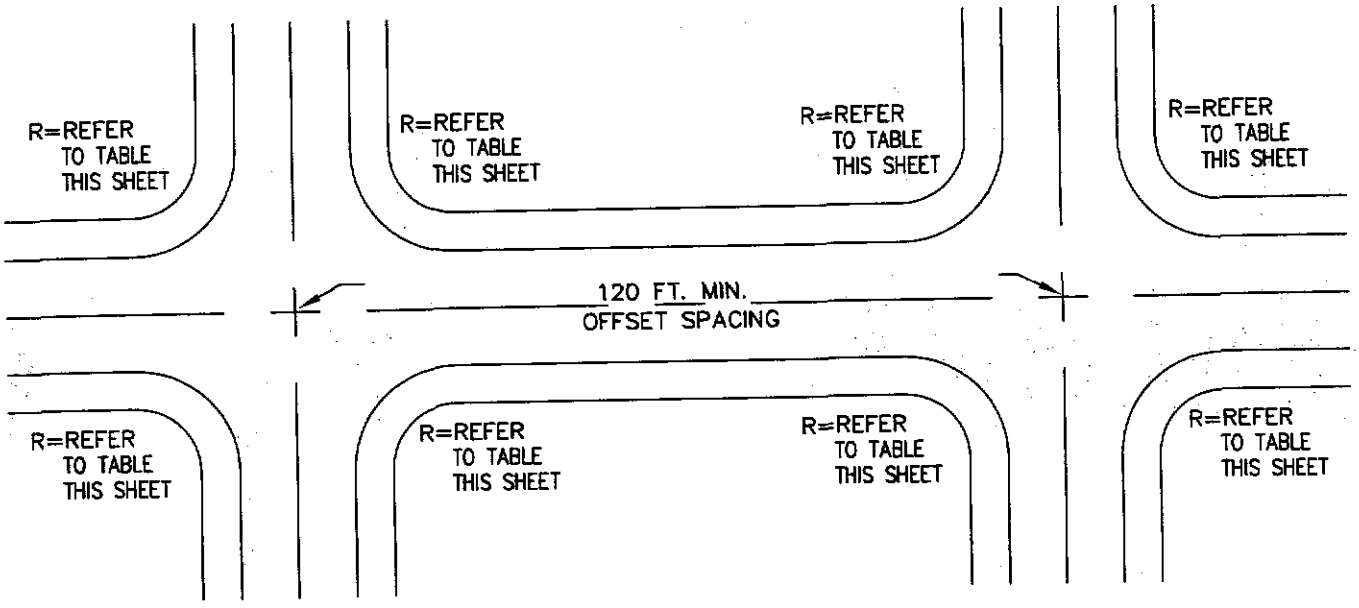

INTERSECTION DESIGN

ROADWAY CLASSIFICATION	DESIGN SPEED
ALLEY	15
(INFORMATION TO BE INCORPORATED AT A LATER DATE)	25
MINOR RESIDENTIAL ACCESS	30
MAJOR RESIDENTIAL ACCESS	30
RESIDENTIAL SUBCOLLECTOR	30
DIVIDED RESIDENTIAL	30
MOUNTAIN RESIDENTIAL & DIVIDED MOUNTAIN RESIDENTIAL:	
< 200 ADT	20
≥ 200 ADT	25
STUB STREET	25
COLLECTOR ARTERIAL	35
MINOR ARTERIAL	40
MAJOR ARTERIAL	45
SUPER ARTERIAL	50

Minimum Curvature of Curbs at Street Intersections	
Intersection	Curb Turn Radius
Local with: Local, Subcollector, or Collector	25'
Local with: Arterial or Freeway	25'
Subcollector with: Subcollector, or Collector	20'
Subcollector with: Arterial or Freeway	25'
Collector with: Collector	25'
Collector with: Arterial or Freeway	30'
Arterial with: Arterial or Freeway	40'

TITLE 19 - SUBDIVISION ORDINANCE

ENGINEERING DEPARTMENT

DESIGN STANDARDS FOR CONSTRUCTION

INTERSECTION DESIGN

3-41

Approved By R. A. SHUBERT
Date JUNE 03, 2008
Checked By H. M. E.
Drawn By QEC / J. R.

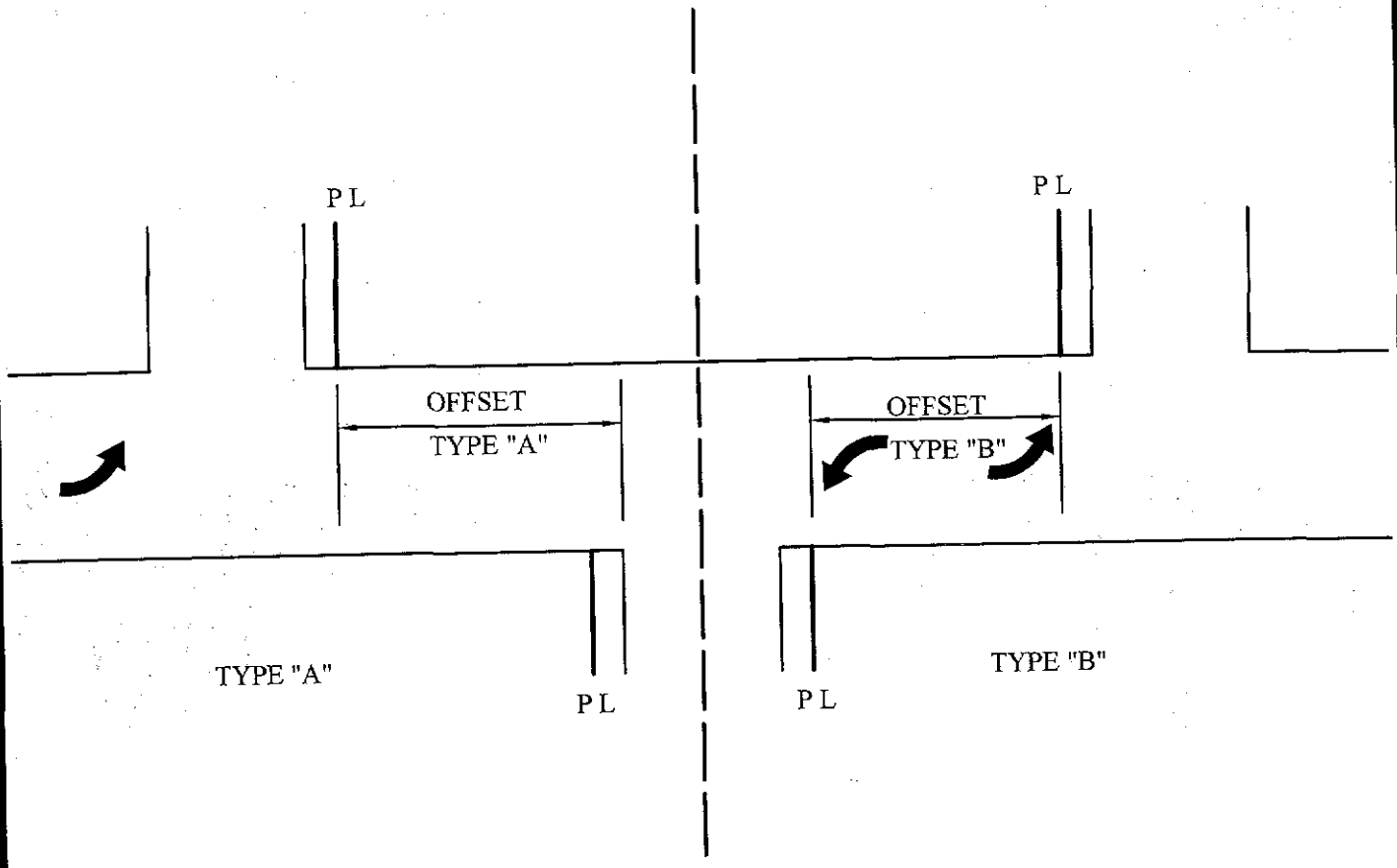

INTERSECTION OFFSET

NOTE:
REFER TO SECTION 19.15.12 - STREET OFFSETS, TABLE 19.15-4 OF THE SUBDIVISION ORDINANCE FOR MINIMUM OFF-SET DISTANCES

TITLE 19 - SUBDIVISION ORDINANCE

ENGINEERING DEPARTMENT

DESIGN STANDARDS FOR CONSTRUCTION

INTERSECTION OFFSET

3-41A

Approved By R. A. SHUBERT
Date JUNE 03, 2008

Checked By H. M. E.
Drawn By QEC / J. R.

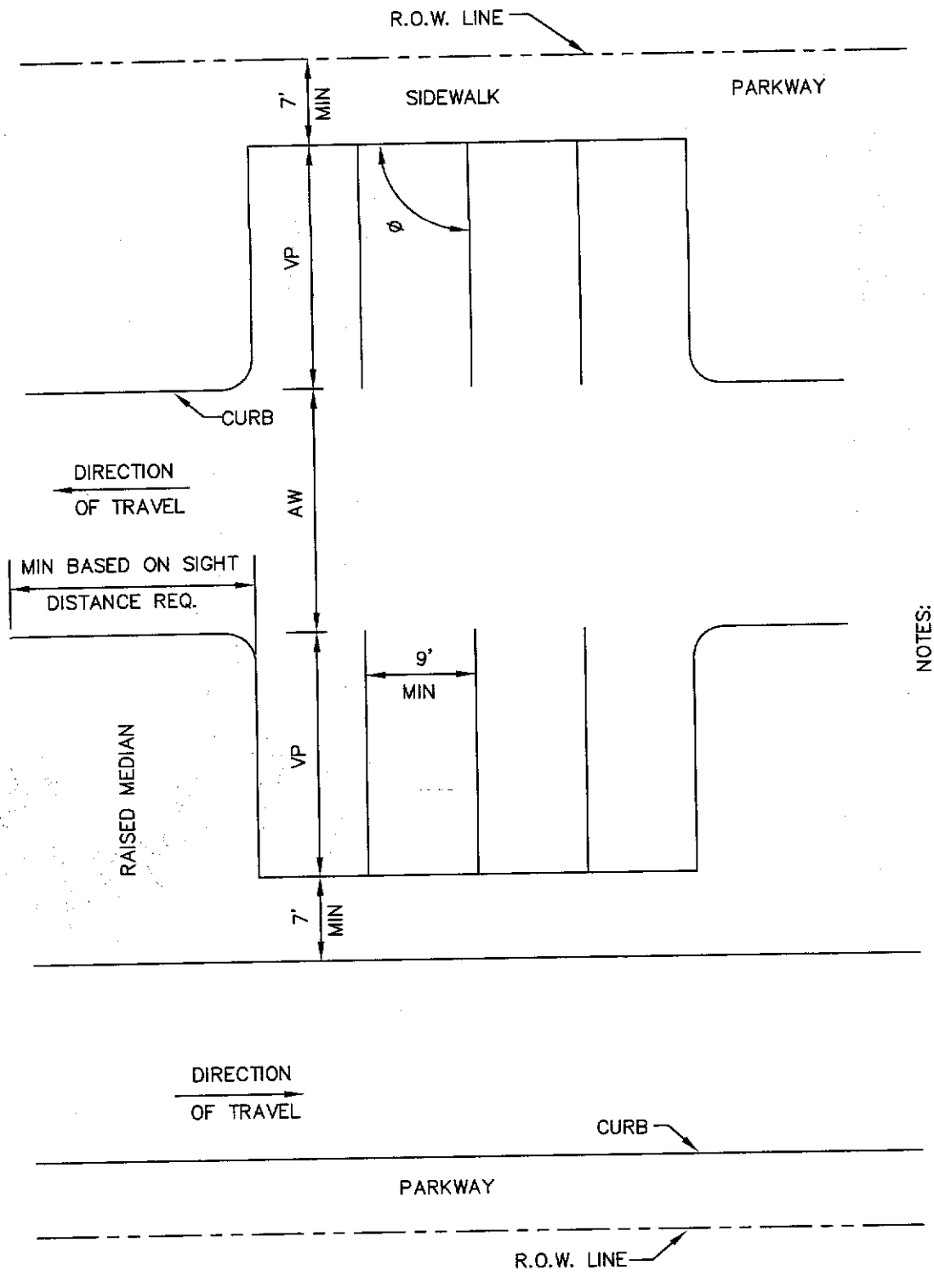

NOTES:

1) FOR TWO-WAY CIRCULATION ON A STREET, ROADWAY SHALL BE A MINIMUM OF 2 x AW WIDTH.
2) CLUSTER PARKING ON PARKWAY OR MEDIAN SHALL MEET MINIMUM SIGHT DISTANCE REQUIREMENTS OF INTERSECTIONS.
3) OTHER APPLICATIONS FOR CLUSTER PARKING SHALL BE PERMITTED UPON THE APPROVAL OF THE CITY ENGINEER BASED ON AASHTO GUIDELINES.

ANGLE Ø	VEHICLE PROJECTION VP	AISLE WIDTH AW
45°	18'-0"	13'-0"
60°	19'-6"	16'-0"
75°	19'-9"	20'-0"
90°	20'-0"	20'-0"

CLUSTER PARKING

TITLE 19 - SUBDIVISION ORDINANCE

ENGINEERING DEPARTMENT

DESIGN STANDARDS FOR CONSTRUCTION

CLUSTER PARKING

3-42

Approved By R. A. SHUBERT
Date JUNE 03, 2008

Checked By H. M. E.
Drawn By QEC / J. R.

TRENCH BACKFILL & PAVEMENT REPLACEMENT

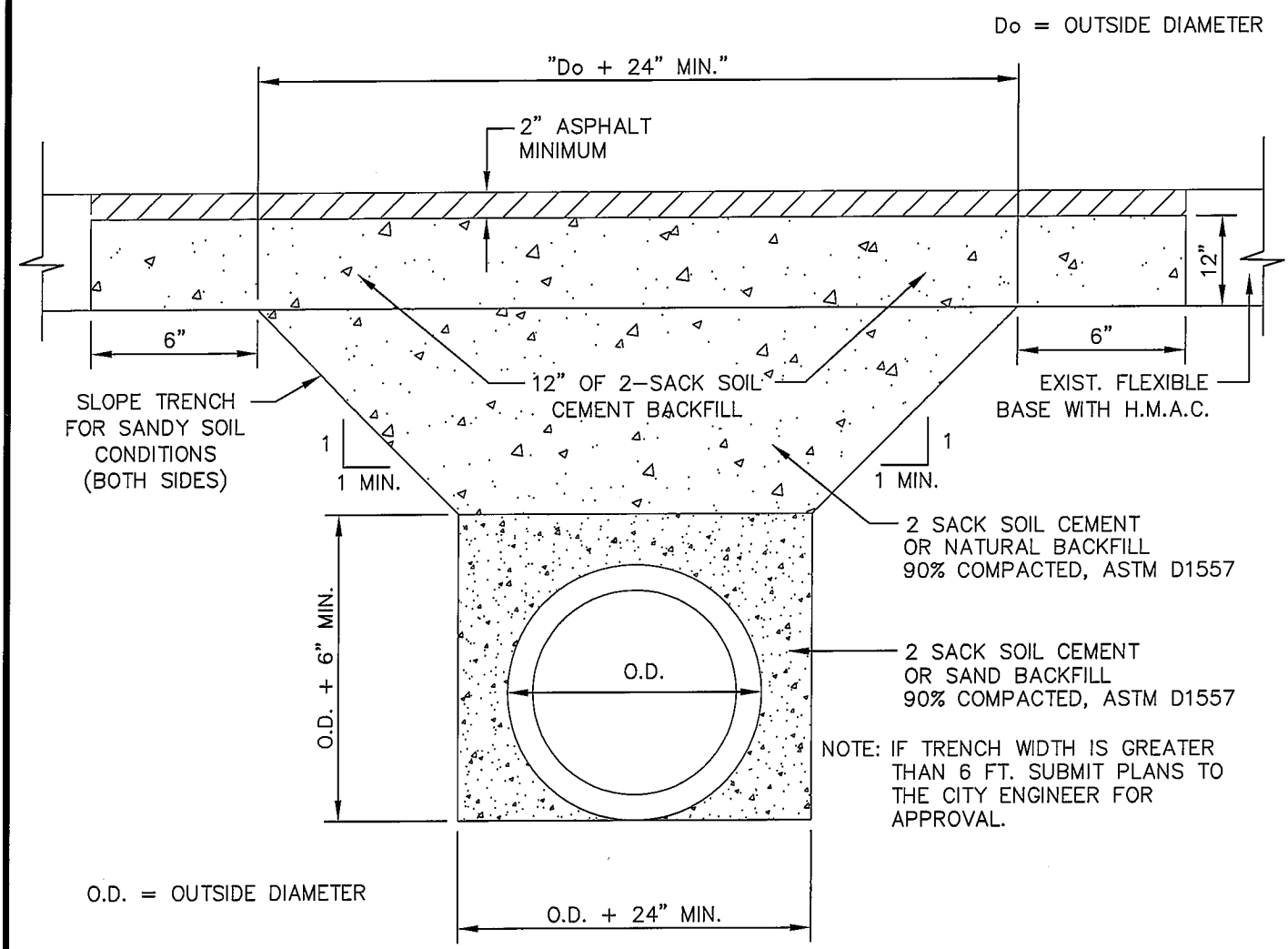

TYPICAL SECTION FLEXIBLE BASE WITH H.M.A.C. SURFACE

A. ALL ASPHALT CUTS MUST BE SAW CUT.

B. TWO SACK SOIL CEMENT MIX MUST BE 2 SACKS OF CEMENT PER ONE CUBIC YARD OF SOIL.

C. PLACE BACKFILL MATERIAL IN 8" MAX. LIFTS AND COMPACT AS SPECIFIED.

CONDUIT TRENCHING

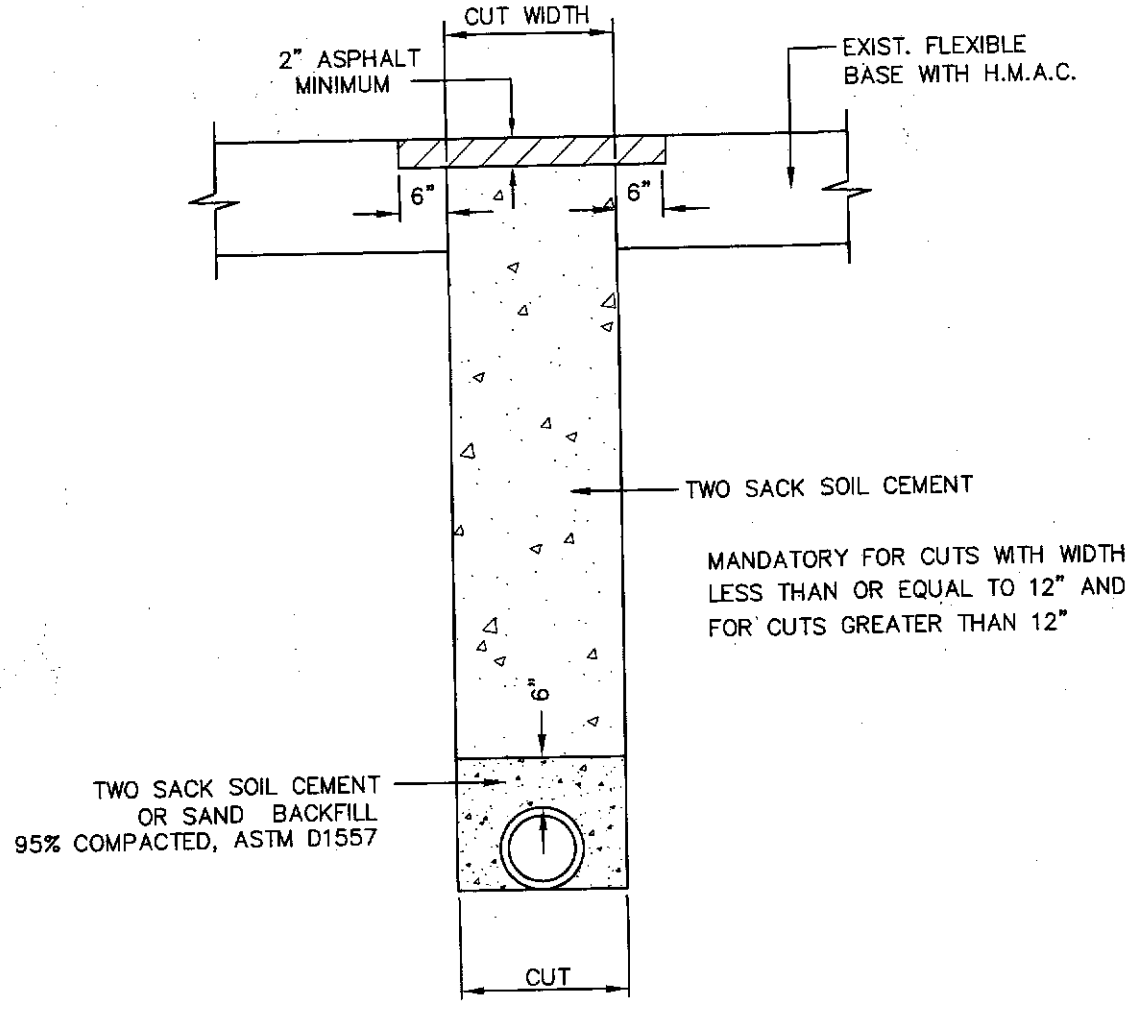

TYPICAL SECTION FLEXIBLE BASE WITH H.M.A.C. SURFACE

1. ALL ASPHALT CUTS MUST BE SAW CUT.
2. TWO SACK SOIL CEMENT MIX MUST BE 2 SACK OF CEMENT PER ONE CUBIC YARD OF SOIL.

TITLE 19 - SUBDIVISION ORDINANCE

ENGINEERING DEPARTMENT

DESIGN STANDARDS FOR CONSTRUCTION

STREET PAVING CUT (CONDUIT)
3-44

Approved By R. A. SHUBERT
Date JUNE 03, 2008

Checked By H. M. E.
Drawn By QEC / J. R.

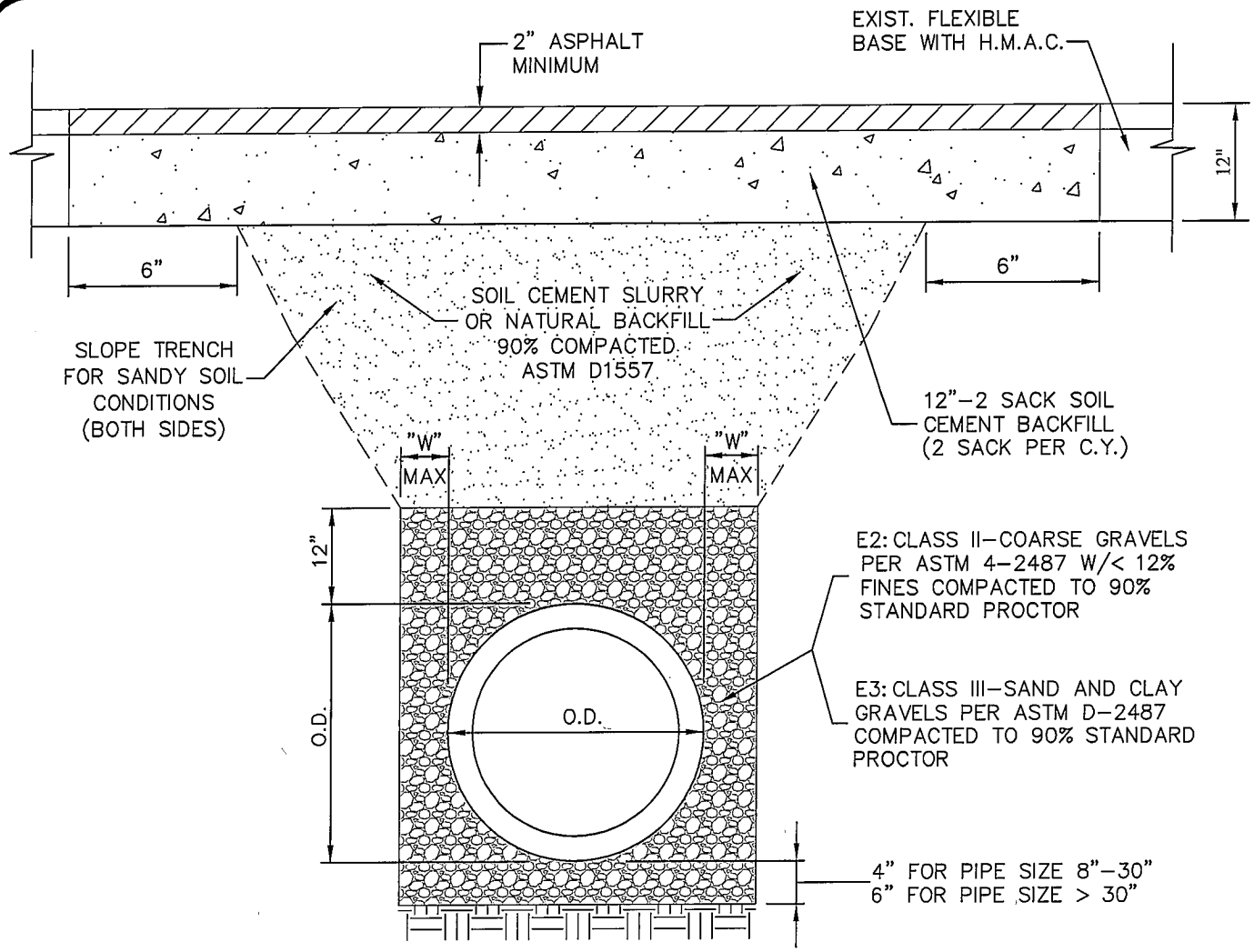

GENERAL NOTES

1. NATURAL MATERIAL MAY BE USED PROVIDED IT MEETS THE SPECIFICATONS FOR CLASS II OR III MATERIALS.
2. EMBEDMENT CONDITIONS SHOWN FOR DRY TRENCH.

CONSTRUCTION KEY NOTES

A. PLACE EMBEDMENT MATERIAL IN 8" MAX. LIFTS AND COMPACT AS SPECIFIED.
B. TRENCH DIMENSION "W" AS FOLLOWS

PIPE DIAMETER	"W"
LESS THAN 24'	9"
24' THRU 48"	12"
GREATER THAN 48"	O.D./4

STREET PAVING CUT FOR FLEXIBLE PIPE

TITLE 19 - SUBDIVISION ORDINANCE

ENGINEERING DEPARTMENT

DESIGN STANDARDS FOR CONSTRUCTION

STREET PAVING CUT FOR FLEXIBLE PIPE

3-45

REV. AUG. 30, 2010-CoEP_EngDsgn

Approved By R. A. SHUBERT | Checked By H.M.E.
Date JUNE 03, 2008 | Drawn By QEC / J.R.

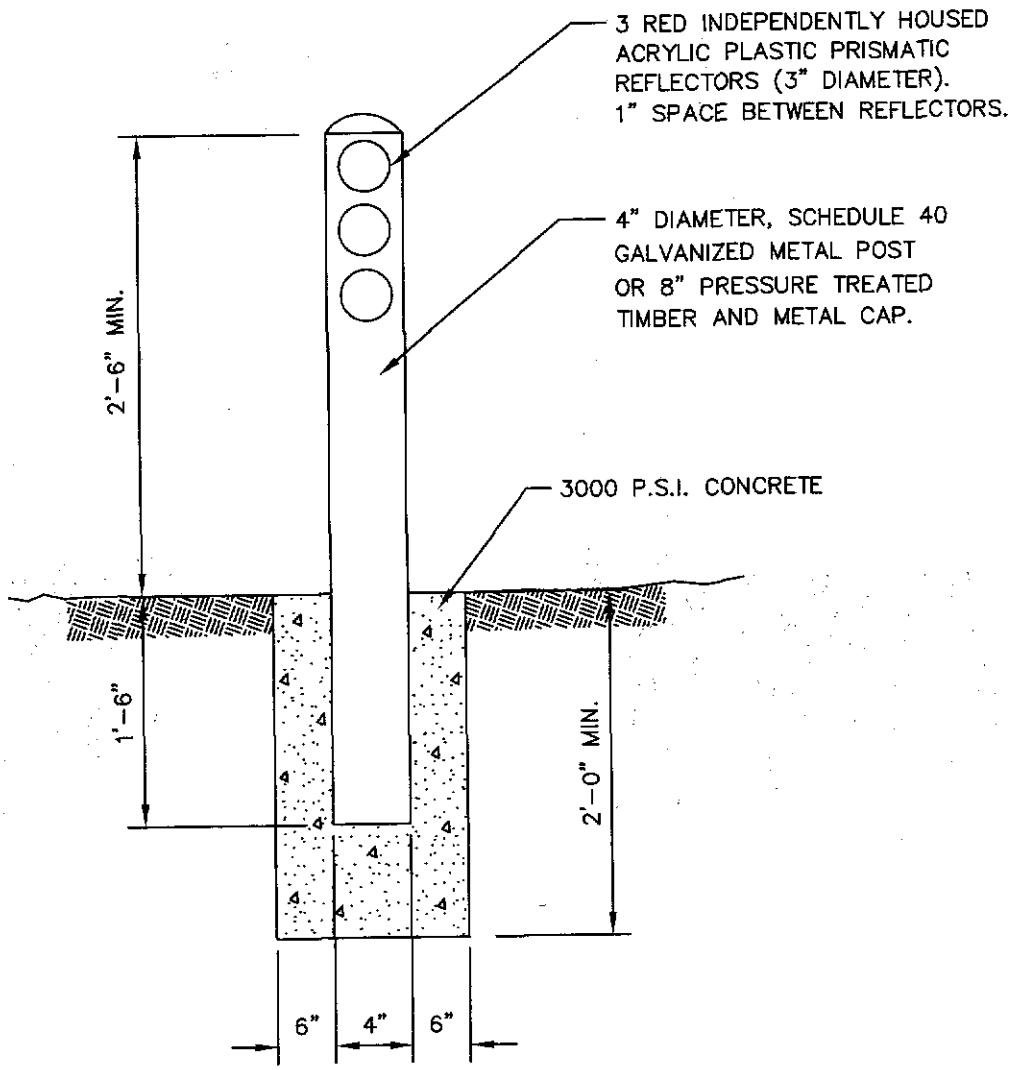

METAL GUARD POST DETAIL

TITLE 19 - SUBDIVISION ORDINANCE

ENGINEERING DEPARTMENT

DESIGN STANDARDS FOR CONSTRUCTION

GUARD POST DETAIL

3-46

Approved By R. A. SHUBERT
Date JUNE 03, 2008

Checked By H. M. E.
Drawn By QEC / J. R.

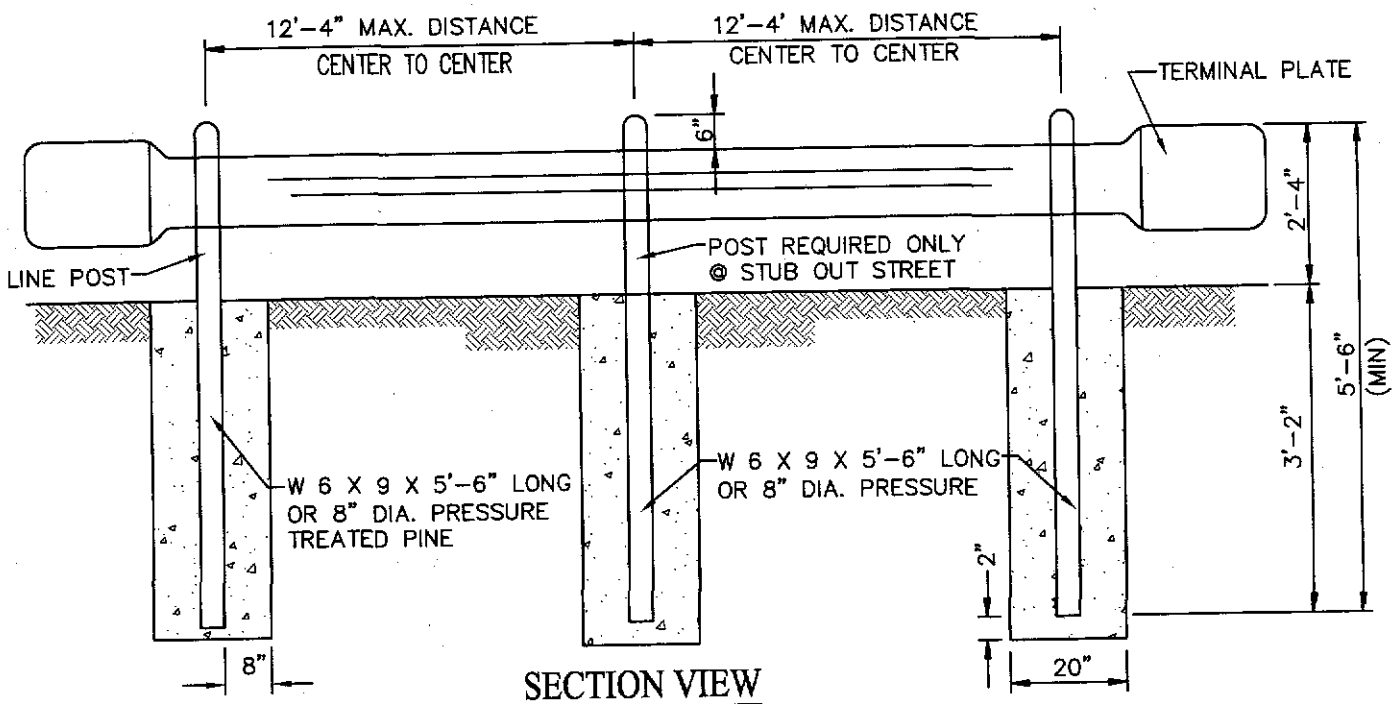

SECTION VIEW
N.T.S.

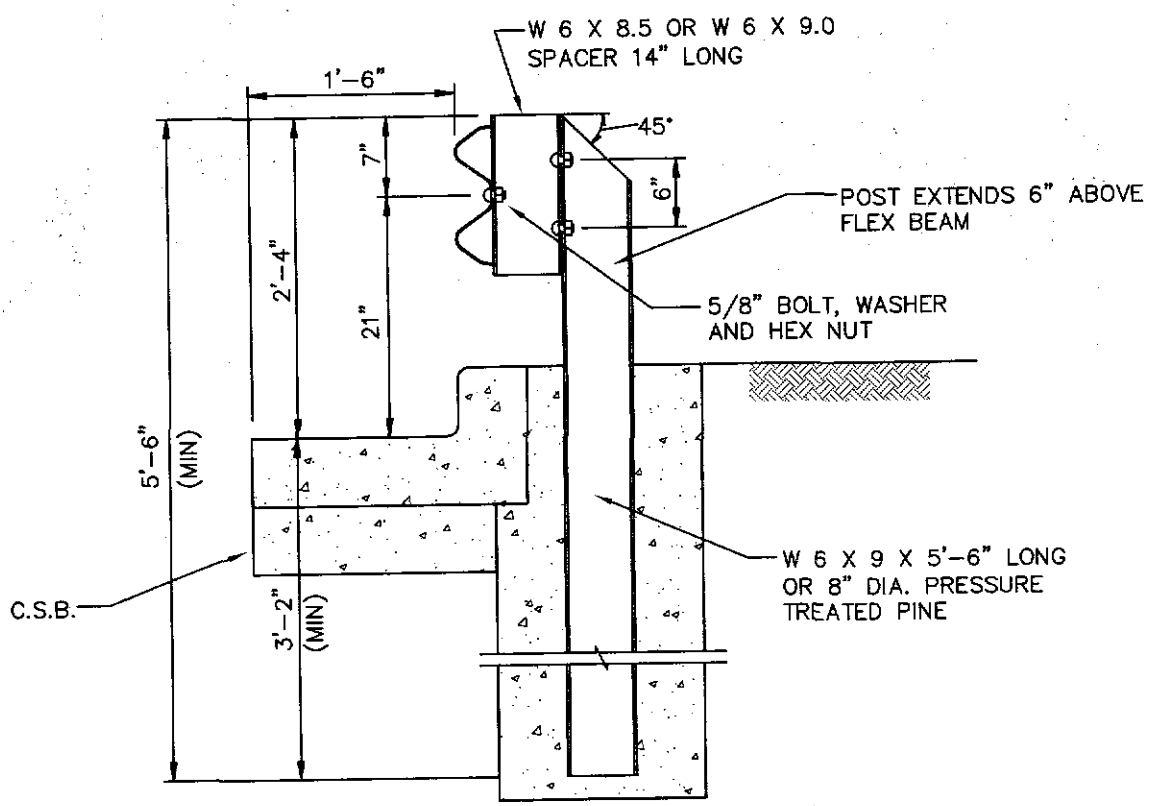

LINE POST DETAIL
N.T.S.

TITLE 19 - SUBDIVISION ORDINANCE

ENGINEERING DEPARTMENT

DESIGN STANDARDS
FOR CONSTRUCTION

GUARD RAIL

3-47

Approved By R. A. SHUBERT	Checked By H. M. E.
Date JUNE 03, 2008	Drawn By QEC / J. R.

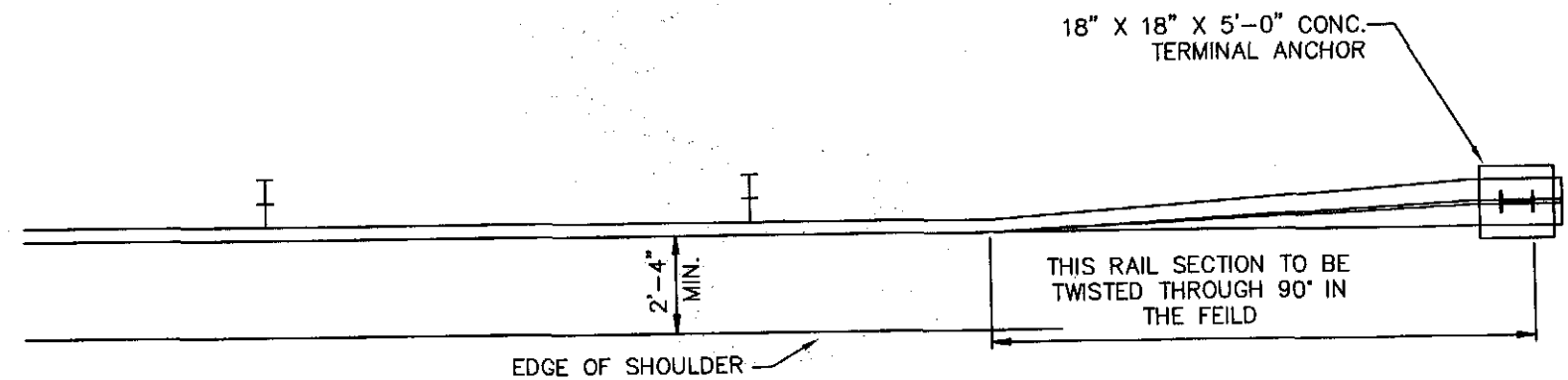

PLAN

N.T.S.

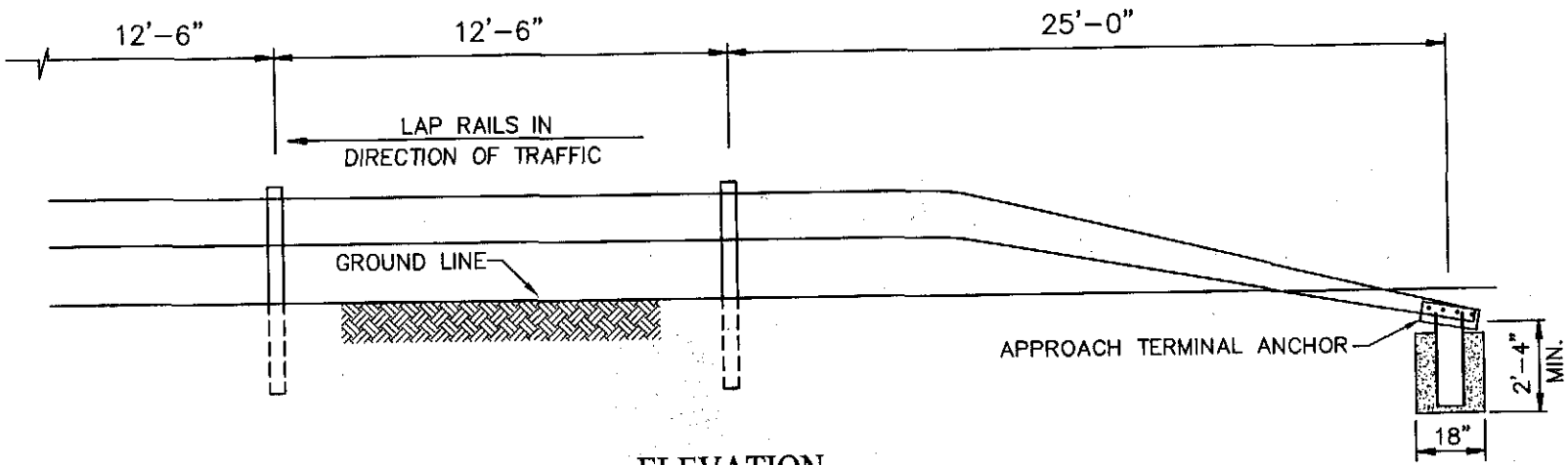

ELEVATION

N.T.S.

NOTE:

1. ALL STEEL FITTINGS SHALL BE GALVANIZED.
2. SEE NO. 3-44 FOR LINE POST DETAIL.

TITLE 19 - SUBDIVISION ORDINANCE

ENGINEERING DEPARTMENT

DESIGN STANDARDS
FOR CONSTRUCTION

TERMINUS METAL BEAM
GUARD FENCE

3-48

Approved By R. A. SHUBERT
Date JUNE 03, 2008

Checked By H. M. E.
Drawn By QEC / J. R.

PROPOSED CITY MONUMENT LOCATIONS

A. MONUMENTS SHALL BE INSTALLED SO THAT ALL FRONT PROPERTY CORNERS OF ALL LOTS IN THE SUBDIVISION ARE WITHIN LINE OF SIGHT OF A MONUMENT, OR WITHIN SIGHT OF THE LINE BETWEEN TWO ADJACENT MONUMENTS

B. EACH MONUMENT SHALL BE WITHIN LINE OF SIGHT OF ANOTHER MONUMENT

C. MONUMENTS SHALL BE NO FARTHER THAN 2000 FEET APART

D. AT LEAST ONE (1) MONUMENT SHALL BE PLACED ON EACH HORIZONTAL CURVE (PI) OF THE TANGENTS LEADING INTO THE CURVE FALLS OUTSIDE THE CURB LINE

E. NO FEWER THAN TWO MONUMENTS SHALL BE PLACED IN ONE (1) STREET SUBDIVISIONS.

PLANE SURVEYS AND GEODETIC CONTROL SUBMISSION REQUIREMENTS ON ALL ENGINEERING AND GIS MAP DRAWINGS

SCOPE:

THESE SUBMISSION REQUIREMENTS APPLY TO ALL WORK DONE IN THE CITY AND COUNTY OF EL PASO. IT IS PUT FORTH TO FACILITATE PERSONNEL TO ACCESS AND UPDATE MAP INFORMATION MORE EFFICIENTLY.

ALL FIELD WORK WHICH REQUIRES A SURVEY SHALL BE REQUIRED TO ABIDE TO THE FOLLOWING:

- BENCHMARK(S) ARE TO BE TIED TO THE PUBLISHED CITY OF EL PASO'S GEODETIC CONTROL POINTS, AND REFERENCED TO THE TEXAS STATE PLANE COORDINATE SYSTEM, CENTRAL ZONE (TXC SPCS), FIPS 4203. HORIZONTAL DATA WILL BE REFERENCED TO NAD83, AND ELEVATIONS TO NAVD88.
- DETAILED CAD DRAWINGS ILLUSTRATING THE SPATIAL LAYOUT OF THE OVERHEAD (PORTION OF A PARCEL MAP AND/OR UTILITY INFRASTRUCTURE) SHALL HAVE ALL BENCHMARKS REFERENCED TO THE TEXAS STATE PLANE COORDINATE SYSTEM, CENTRAL ZONE (TXC SPCS), FIPS 4203. HORIZONTAL DATA WILL BE REFERENCED TO NAD83, AND ELEVATIONS TO NAVD88. THIS WILL ALLOW THE ELECTRONIC DRAWING(S) TO CONFORM AND OVERLAY TO ALL EXISTING ENGINEERING COMPUTER AIDED DESIGNS, GIS LAYERS AND IMAGERY.

DELIVERY

1. A DIGITAL COPY(S) OF THE COMPUTER AIDED DESIGN DRAWING REFERENCED TO THE TEXAS STATE PLANE COORDINATE SYSTEM , CENTRAL ZONE, FIPS 4203, NAD83, AND ELEVATIONS TO NAVD88; ELEVATIONS WILL BE NOTED (ANNOTATED) NEXT TO THE BENCHMARK(S) IN BOTH NAVD88 AND GROUND/SURFACE COORDINATES.
2. A HARD COPY.
3. A REPORT ON THE ELEVATIONS OF SURVEYED BENCHMARKS IN GROUND COORDINATES AND REFERENCED TO THE NORTH AMERICAN VERTICAL DATUM OF 1988

AN ADDITIONAL REPORT IS REQUIRED WHEN A NEW BENCHMARK IS TIED INTO THE SURVEY. THE REPORT WILL INCLUDE THE SURVEYED COORDINATES AND THE TIED COORDINATES AS THEY READ FROM THE CITY OF EL PASO'S GEODETIC CONTROL SYSTEM.

SURVEYS AND MONUMENTS

TEXAS COORDINATE SYSTEM MONUMENTATION: SUBDIVISION PLATS INTRODUCED TO THE CITY OF EL PASO SHALL BE TIED TO TEXAS STATE PLANE COORDINATE SYSTEM CONTROL ZONE, IN CONFORMANCE WITH THE REQUIREMENTS OF DIVISION X, CHAPTER X, SECTION XXX ET SEQ. OF THE PUBLIC RESOURCES CODE OF THE STATE OF TEXAS, UNLESS WAIVED IN WRITING BY THE CITY ENGINEER. COORDINATES AND BEARINGS MAY BE BASED UPON TEXAS CENTRAL STATE PLANE COORDINATE SYSTEM AND SHALL BE BASED UPON THE HORIZONTAL DATUM OF 1983 AND VERTICAL DATUM OF 1988. ALL TIES SHALL BE IDENTIFIED WITH GRID BEARINGS AND GROUND LEVEL DISTANCES, AND THE FOLLOWING NOTE SHALL APPEAR ON ALL SHEETS OF THE MAP UPON WHICH ANY PARCEL IS SHOWN:

TEXAS STATE PLANE COORDINATE SYSTEM: COORDINATES AND BEARINGS SHOWN HEREON ARE BASED ON THE TEXAS STATE PLANE COORDINATE SYSTEM, FIPS 4203, US SURVEY FEET (NAD 83, NAVD 88) AND TIED TO THE CITY OF EL PASO'S GEODETIC CONTROL POINT SURVEY. DISTANCES SHOWN ARE GROUND LEVEL DISTANCE. TO OBTAIN GRID DISTANCE, MULTIPLY GROUND LEVEL DISTANCE BY (COMBINATION FACTOR). THE NORTH ARROW SHALL INDICATE GRAPHICALLY THE DIVERGENCE BETWEEN GEODETIC NORTH AND GRID NORTH, AND THE THETA (0) ANGLE SHALL BE SHOWN NOTING AT WHICH MONUMENT SAID ANGLE WAS COMPUTED. THE ONLY COORDINATES APPEARING ON THE FINAL MAP SHALL BE FOR THE PRIMARY GEODETIC CONTROL STATIONS.

BOUNDARY MONUMENTS: MONUMENTS SHALL BE SET OR REFERENCED ON THE EXTERIOR BOUNDARY OF THE SUBDIVISION AT ALL CORNERS, ANGLE POINTS, BEGINNING AND ENDS OF CURVES AND AT INTERMEDIATE POINTS NOT TO EXCEED 1,000 FEET APART. THE LOCATION OF INACCESSIBLE POINTS SHALL BE ESTABLISHED BY TIES TO THE CITY OF EL PASO'S GEODETIC CONTROL POINT SURVEY AND SHALL BE NOTED ON THE FINAL MAP OR PARCEL MAP. IF ANY OR ALL OF THE BOUNDARY MONUMENTS ARE TO BE SET AFTER FILING OF THE FINAL MAP OR PARCEL MAP WITH THE COUNTY RECORDER, THE SURVEYOR MAKING THE SURVEY SHALL FURNISH EVIDENCE ACCEPTABLE TO THE CITY ENGINEER TO SUBSTANTIATE HIS REASONS FOR DEFERRING THE SETTING OF SUCH MONUMENTS UNTIL AFTER FILING OF SUCH MAP WITH THE COUNTY RECORDER.

INTERIOR MONUMENTS: MONUMENTS SHALL BE SET AT ALL BLOCK, LOT OR PARCEL CORNERS AND ANGLE POINTS AND AT THE BEGINNINGS AND ENDS OF CURVES AND WITHIN STREET RIGHTS-OF-WAY. IF THE INTERIOR MONUMENTS ARE NOT SET WITHIN THE PERIOD OF TIME SPECIFIED ON THE SURVEYOR'S CERTIFICATE, THE CITY ENGINEER SHALL BY WRITTEN NOTICE FORTHWITH DIRECT THE SURVEYOR OF RECORD TO SET SUCH MONUMENTS WITHIN SIXTY (60) DAYS OF NOTICE, AND FURNISH SUCH FIELD NOTES AS WERE AGREED TO BE SET AND FURNISHED ON SAID CERTIFICATE. IF THE SURVEYOR FAILS TO COMPLY WITH SAID DIRECTIVE AFTER 60 DAYS, THE CITY ENGINEER SHALL WITHOUT FURTHER NOTICE SUBMIT A WRITTEN COMPLAINT AND REQUEST FOR DISCIPLINARY ACTION AGAINST SAID SURVEYOR TO THE TEXAS BOARD OF PROFESSIONAL LAND SURVEYING.

MONUMENT TYPE: ALL BOUNDARY MONUMENTS AND MONUMENTS SET WITHIN EXISTING AND PROPOSED CITY RIGHTS-OF-WAY SHALL BE STANDARD CITY MONUMENTS AND SHALL BE SET TO THE DEPTH AND IN THE MANNER PRESCRIBED IN THE SUBDIVISION STANDARDS.

MONUMENT IDENTIFICATION MARKS: ALL MONUMENTS SET AS REQUIRED HEREIN SHALL BE PERMANENTLY AND VISIBLY MARKED OR TAGGED WITH THE REGISTRATION OR LICENSE NUMBER OF THE SURVEYOR WHO SIGNS THE SURVEYOR'S CERTIFICATE AND UNDER WHOSE SUPERVISION THE SURVEY WAS MADE.

REPLACEMENT OF DESTROYED MONUMENTS: ANY MONUMENT SET AS REQUIRED HEREIN WHICH IS DISTURBED OR DESTROYED BEFORE ACCEPTANCE OF ALL IMPROVEMENTS BY THE CITY SHALL BE REPLACED BY THE SUBDIVIDER'S SURVEYOR AND NEW MONUMENT CERTIFICATION SHALL BE SUBMITTED.

SURVEY DATA AND INFORMATION TO BE SHOWN ON FINAL MAP OR PARCEL MAP: THE FOLLOWING SURVEY DATA AND INFORMATION SHALL BE SHOWN ON EACH FINAL MAP OR PARCEL MAP BASED UPON A FIELD SURVEY: 1) STAKES, MONUMENTS OR OTHER EVIDENCE FOUND ON THE GROUND TOGETHER WITH THEIR PRECISE POSITIONS TO DETERMINE THE BOUNDARIES OF THE SUBDIVISION; AND 2) CORNERS OF ALL ADJOINING PROPERTIES IDENTIFIED BY LOT AND BLOCK NUMBERS, SUBDIVISION NAMES, NUMBERS AND PAGE OF RECORD OR BY SECTION, TOWNSHIP AND RANGE OR OTHER PROPER DESIGNATION.

EMBOSS STAR, RING AND LETTERS TO HEIGHT OF 3/32"

OUTSIDE RADIUS OF STAR = 3/4"

INSIDE RADIUS OF STAR = 3/16"

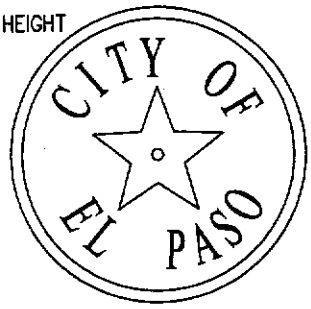

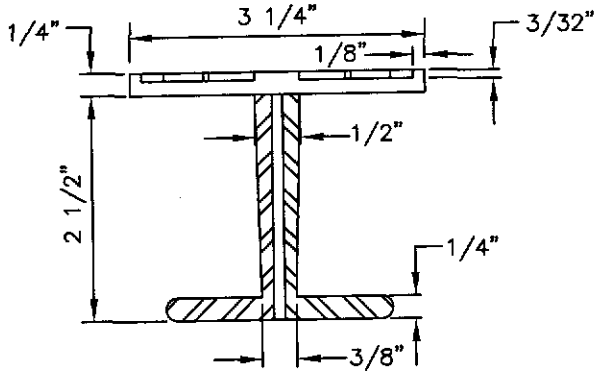

BRONZE MONUMENT CAP

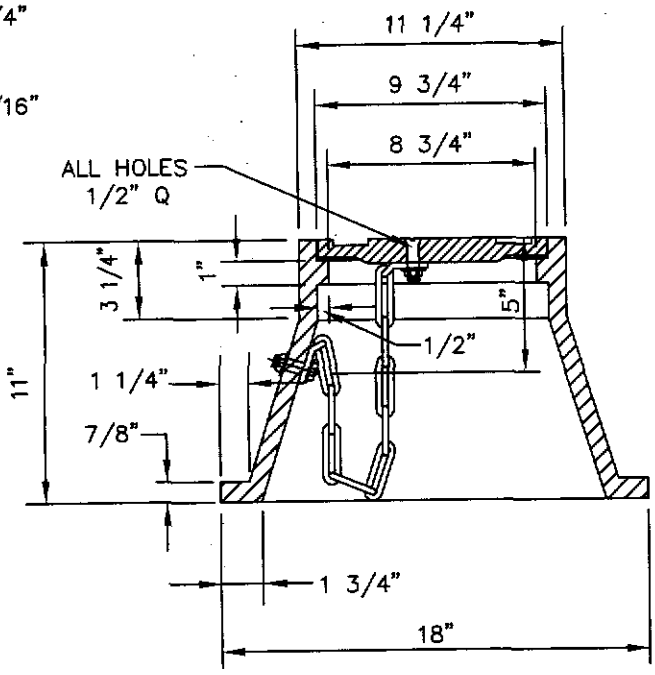

MONUMENT BOX

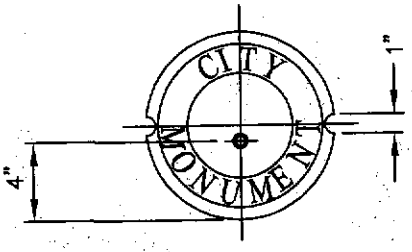

NO FORMS REQUIRED
CONCRETE TO BE
POURED IN PLACE.
3000 P.S.I. CONCRETE.

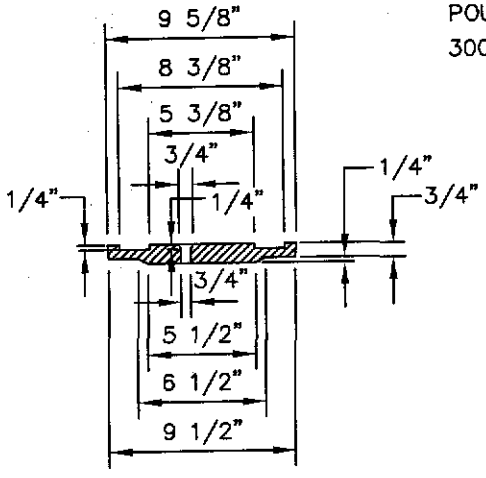

BOX COVER

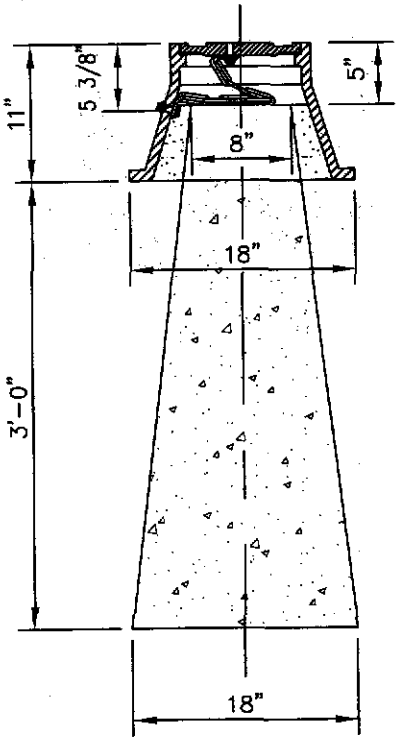

SECTION VIEW

TITLE 19 - SUBDIVISION ORDINANCE

ENGINEERING DEPARTMENT

DESIGN STANDARDS FOR CONSTRUCTION

CITY SURVEY MONUMENT

3-52

Approved By R. A. SHUBERT	Checked By H. M. E.
Date JUNE 03, 2008	Drawn By QEC / J. R.

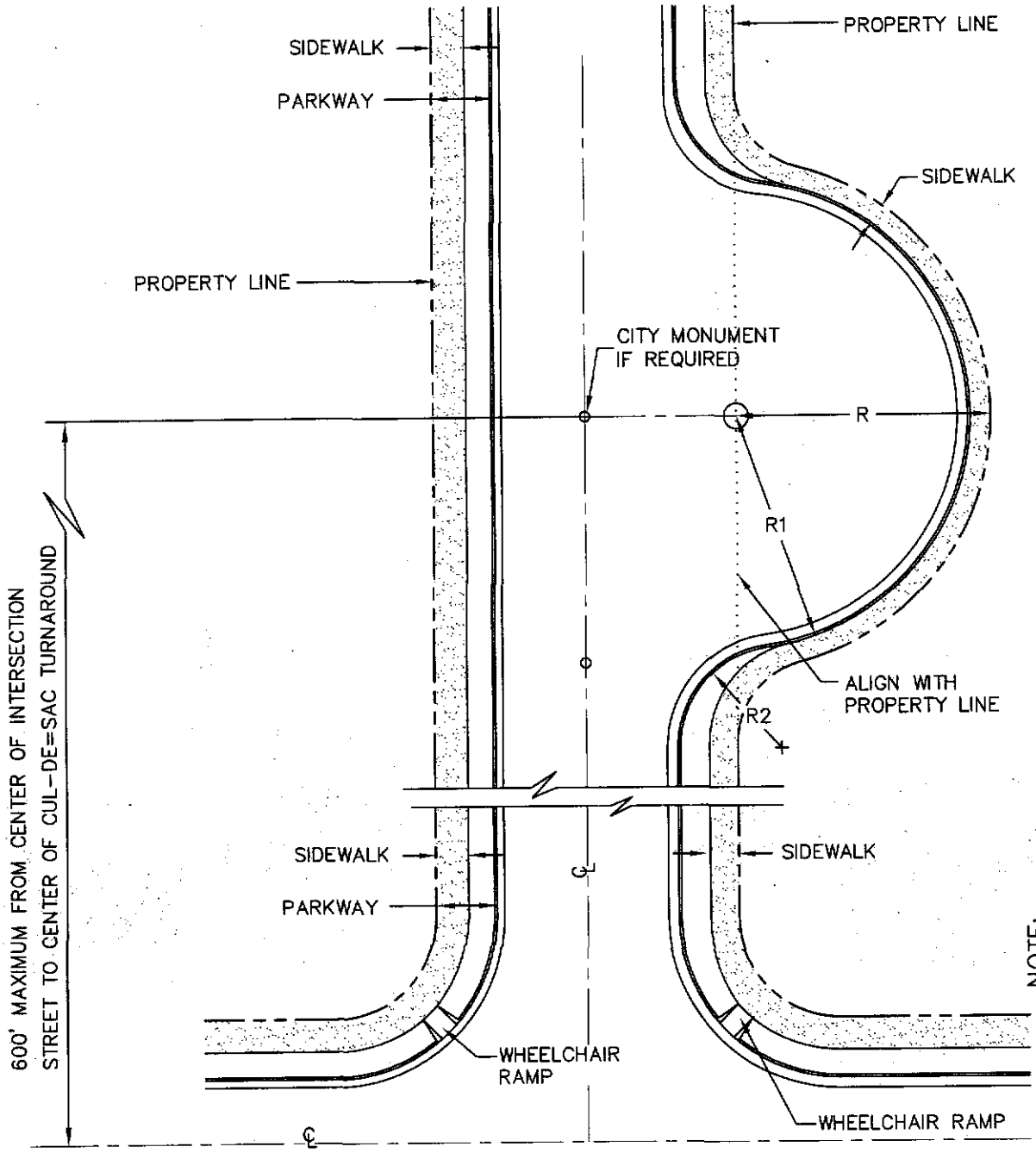

NOTE:
WHERE SIDEWALKS ARE NOT REQUIRED OR ARE PERMITTED TO BE LOCATED ADJACENT TO AND PARALLEL WITH THE CURB LINE, THE TOTAL STREET RIGHT-OF-WAY SHALL BE REDUCED BY DEDUCTING 3'-6" FROM THE PARKWAY ON EACH AFFECTED SIDE OF THE STREET.

	R	R1	R2
32' LOCAL	58'	54'	20'
RESIDENTIAL COLLECTOR = (36' RDWY.)	50'	46'	20'
MINOR\DIVIDED\MOUNTAIN RESIDENTIAL = (20' RDWY.)	66'	62'	20'
* DIVIDED MOUNTAIN RESIDENTIAL = (10' RDWY.)	–	–	–

* SINGLE EYEBROW CUL-DE-SAC SHALL NOT BE PERMITTED

TITLE 19 - SUBDIVISION ORDINANCE

ENGINEERING DEPARTMENT

DESIGN STANDARDS FOR CONSTRUCTION

SINGLE EYEBROW CUL-DE-SAC

3-53

Approved By R. A. SHUBERT
Date JUNE 03, 2008

Checked By H. M. E.
Drawn By QEC / J. R.

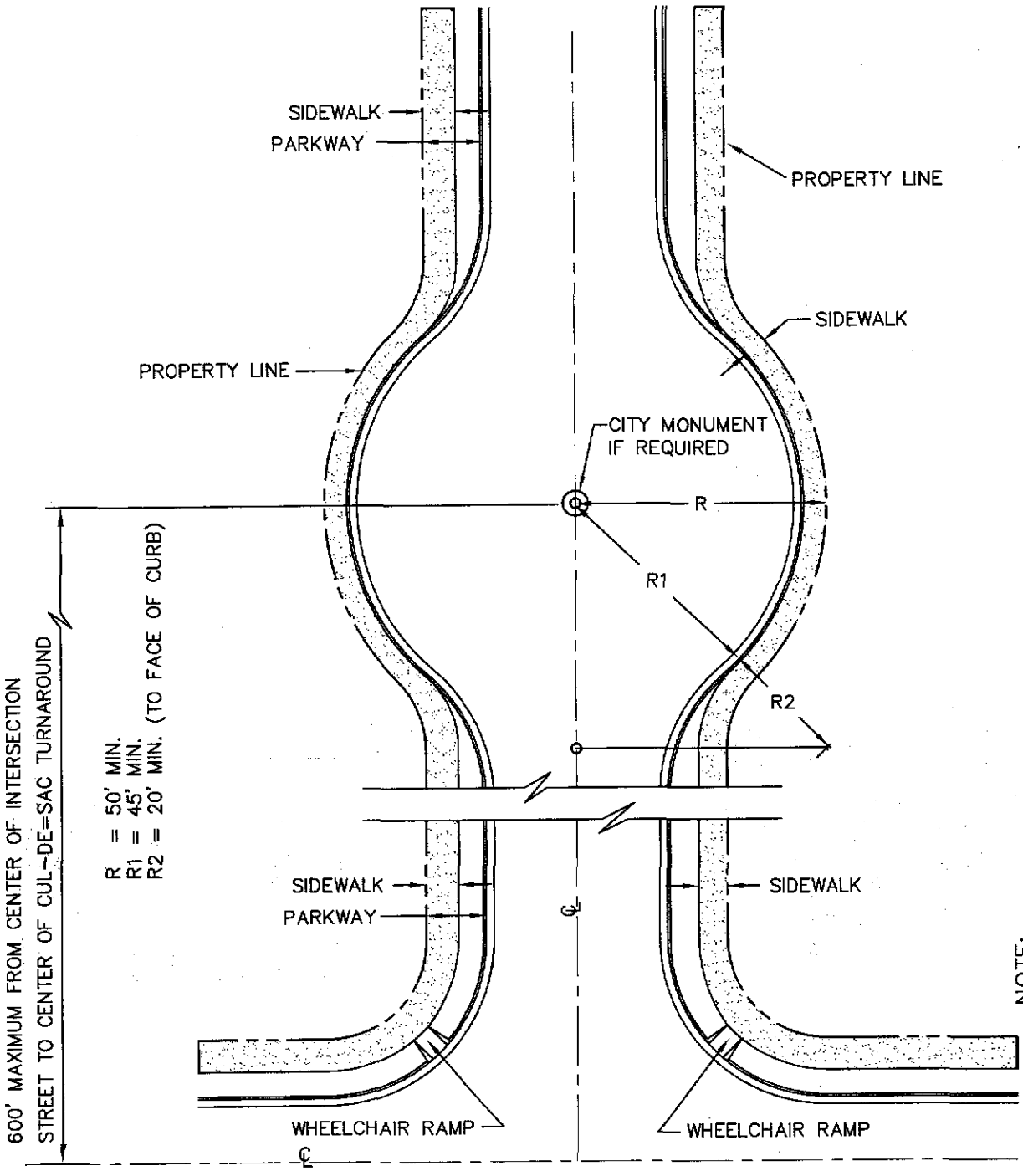

NOTE:
WHERE SIDEWALKS ARE NOT REQUIRED OR ARE PERMITTED TO BE LOCATED ADJACENT TO AND PARALLEL WITH THE CURB LINE, THE TOTAL STREET RIGHT-OF-WAY SHALL BE REDUCED BY DEDUCTING 3'-6" FROM THE PARKWAY ON EACH AFFECTED SIDE OF THE STREET.

DIVIDED MOUNTAIN RESIDENTIAL DUAL EYEBROW CUL-DE-SAC'S MAY BE PERMITTED SUBJECT TO THE APPROVAL OF THE CITY ENGINEER.

TITLE 19 - SUBDIVISION ORDINANCE

ENGINEERING DEPARTMENT

DESIGN STANDARDS FOR CONSTRUCTION

DUAL EYEBROW CUL-DE-SAC

3-54

Approved By R. A. SHUBERT	Checked By H. M. E.
Date JUNE 03, 2008	Drawn By QEC / J. R.

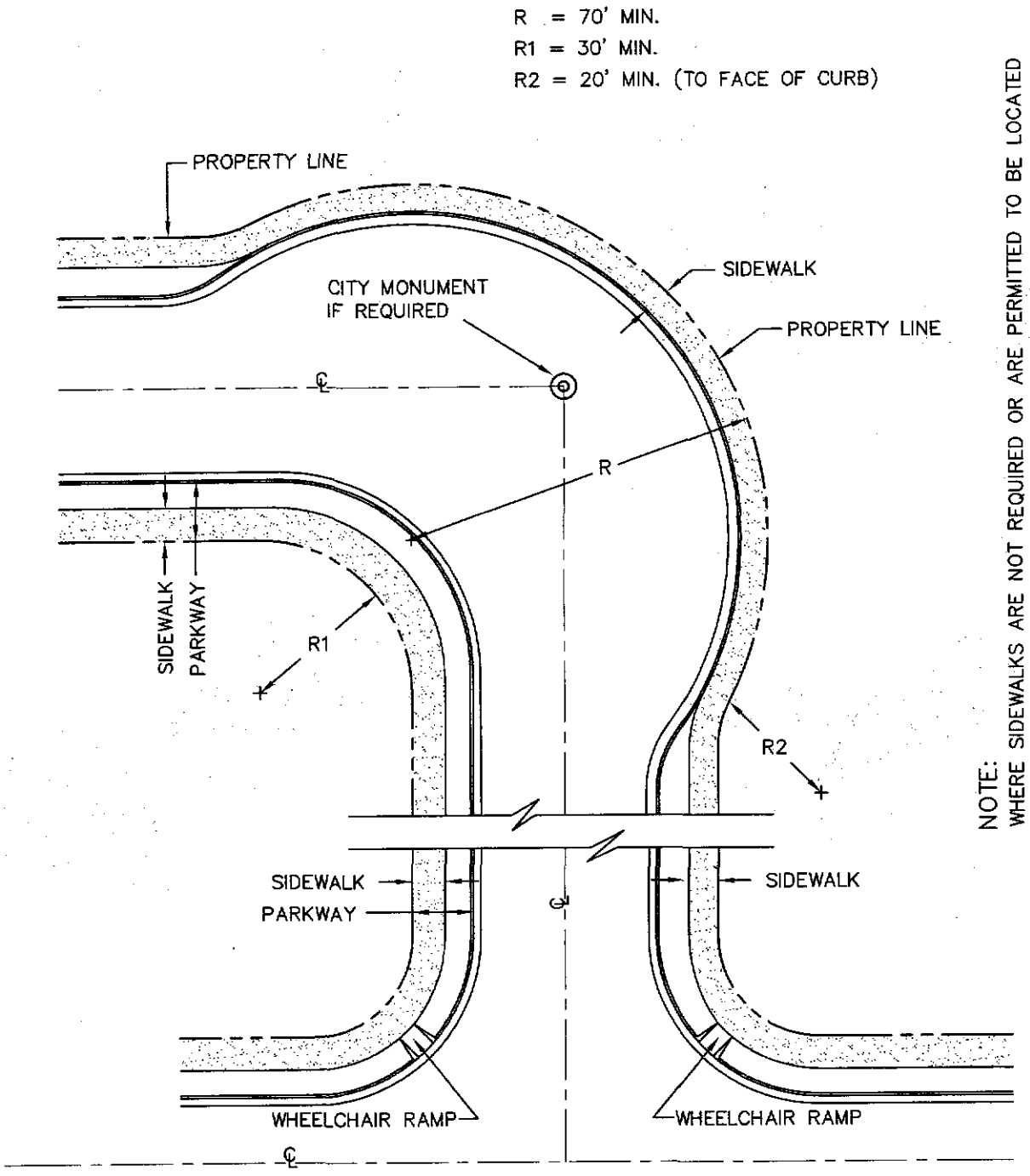

NOTE:
WHERE SIDEWALKS ARE NOT REQUIRED OR ARE PERMITTED TO BE LOCATED ADJACENT TO AND PARALLEL WITH THE CURB LINE, THE TOTAL STREET RIGHT-OF-WAY SHALL BE REDUCED BY DEDUCTING 3'-6" FROM THE PARKWAY ON EACH AFFECTED SIDE OF THE STREET.

TITLE 19 - SUBDIVISION ORDINANCE

ENGINEERING DEPARTMENT

DESIGN STANDARDS FOR CONSTRUCTION

TURNING HEEL CURVE

3-55

Approved By R. A. SHUBERT	Checked By H. M. E.
Date JUNE 03, 2008	Drawn By QEC / J. R.

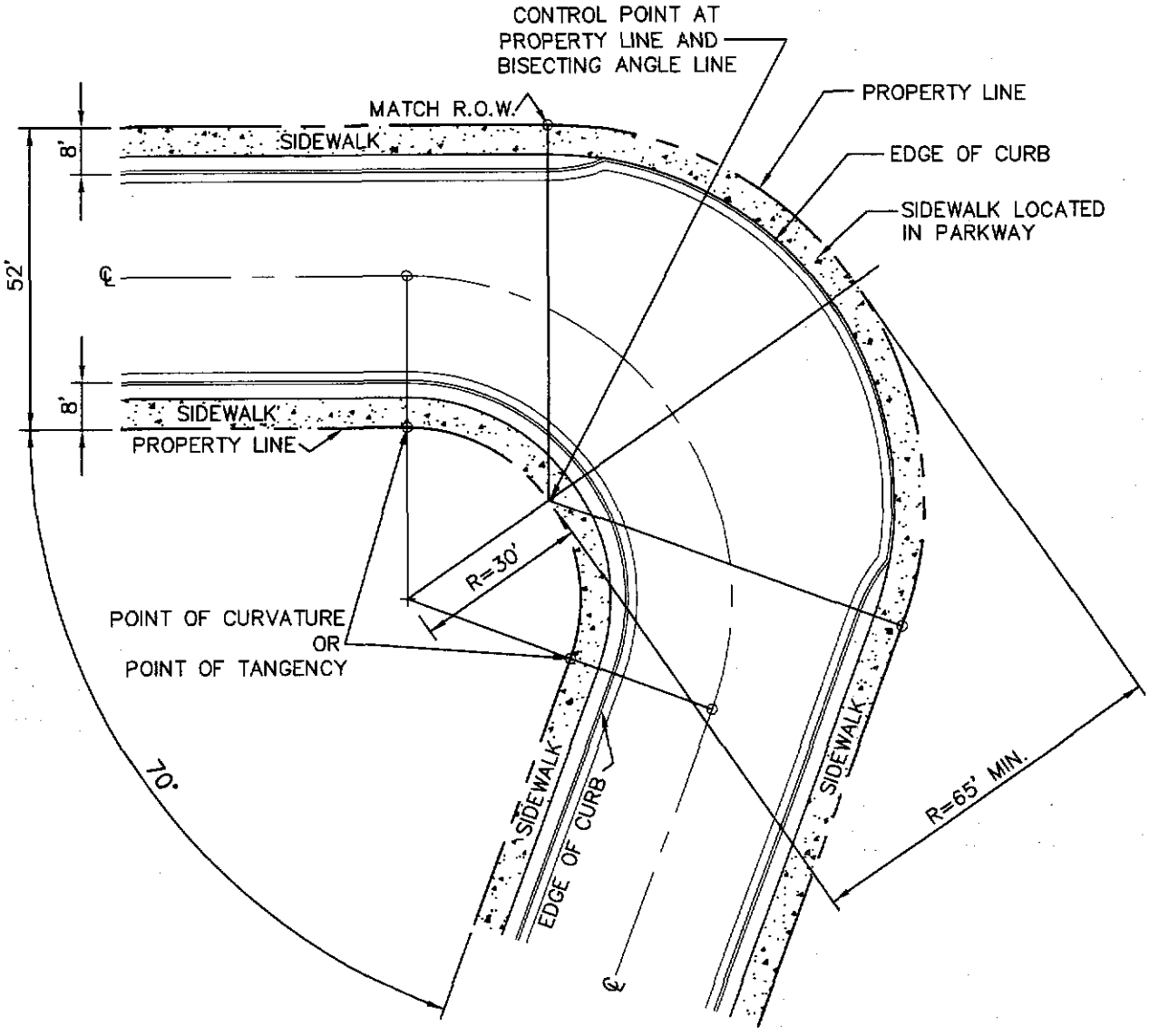

PROPOSED 70 DEGREE ANGLE (MIN.) TURNING HEEL.

TITLE 19 - SUBDIVISION ORDINANCE

ENGINEERING DEPARTMENT

DESIGN STANDARDS
FOR CONSTRUCTION

PROPOSED 70 DEGREE
ANGLE (MIN.) TURNING HEEL
3-56

Approved By R. A. SHUBERT	Checked By H. M. E.
Date JUNE 03, 2008	Drawn By QEC / J. R.

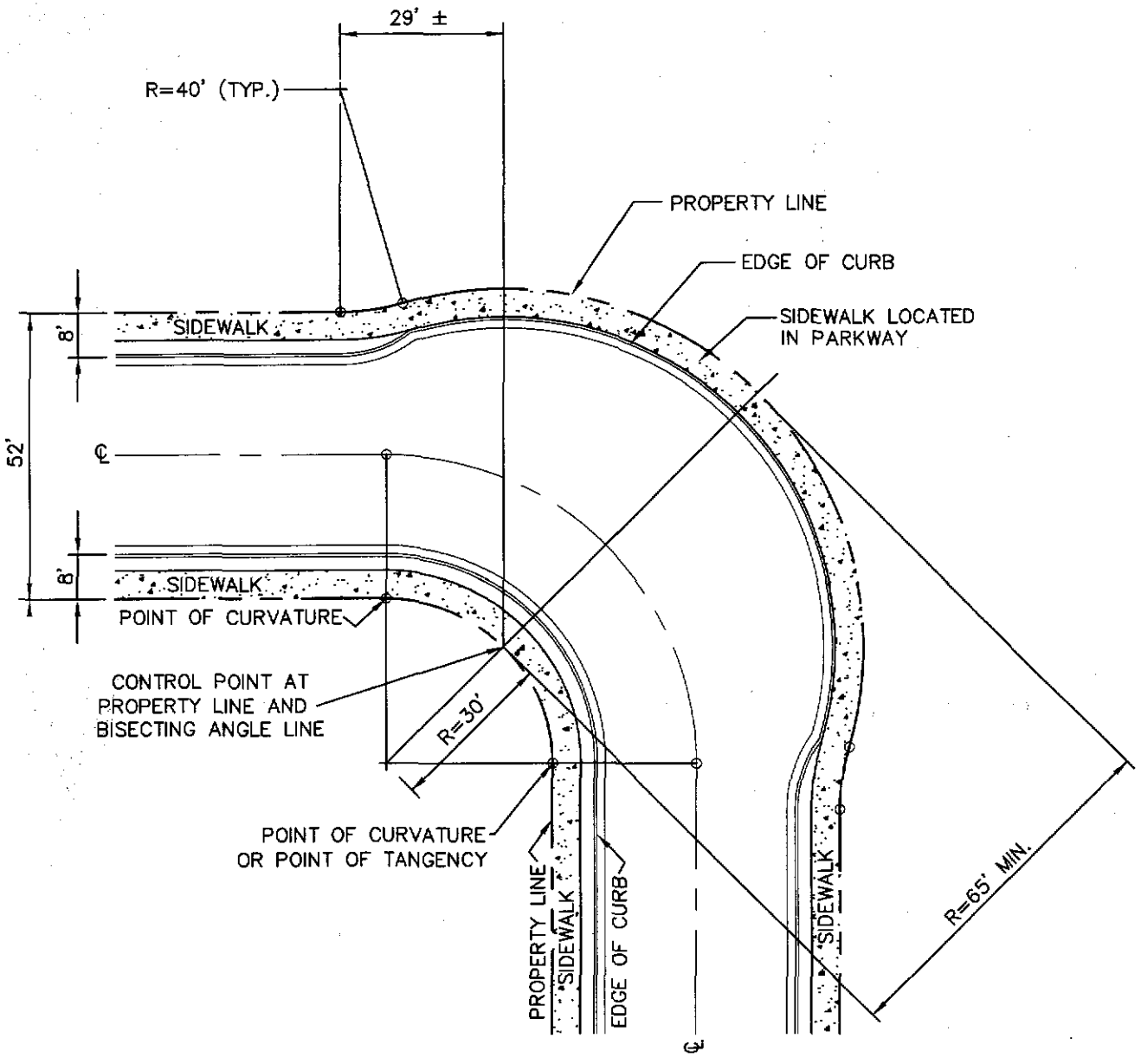

PROPOSED 90 DEGREE ANGLE TURNING HEEL.

TITLE 19 - SUBDIVISION ORDINANCE

ENGINEERING DEPARTMENT

DESIGN STANDARDS FOR CONSTRUCTION

PROPOSED 90 DEGREE ANGLE TURNING HEEL

3-57

Approved By R. A. SHUBERT	Checked By H. M. E.
Date JUNE 03, 2008	Drawn By QEC / J. R.

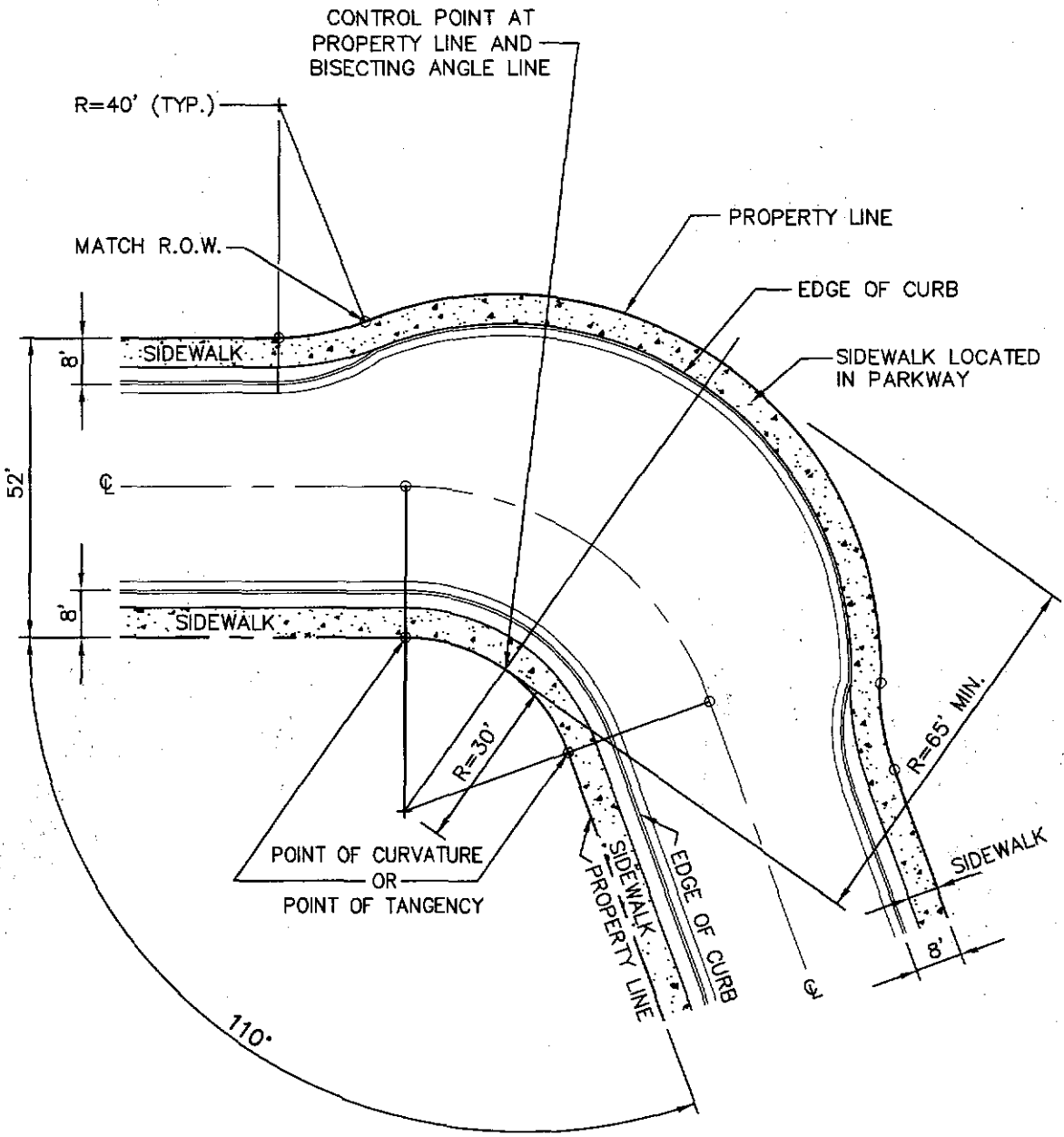

PROPOSED 110 DEGREE ANGLE (MAX.) TURNING HEEL.

TITLE 19 - SUBDIVISION ORDINANCE

ENGINEERING DEPARTMENT

DESIGN STANDARDS
FOR CONSTRUCTION

PROPOSED 110 DEGREE ANGLE (MAX.) TURNING HEEL

3-58

Approved By R. A. SHUBERT	Checked By H. M. E.
Date JUNE 03, 2008	Drawn By QEC / J. R.

SECTION 4

SECTION 4

FENCING

TITLE	PAGE
CHANLINK STANDARD DETAILS	4-1
CHANLINK FENCE POST	4-2
ROCKWALL DESIGN	4-3
WROUGHT IRON FENCE AND GATE DETAIL	4-4

1. ALL PIPE TO BE SCHEDULE 40 GALVANIZED. CONSULT AMERICAN FENCE CO., U.S. STEEL OR APPROVED EQUAL DATA FOR SPECIFICATIONS

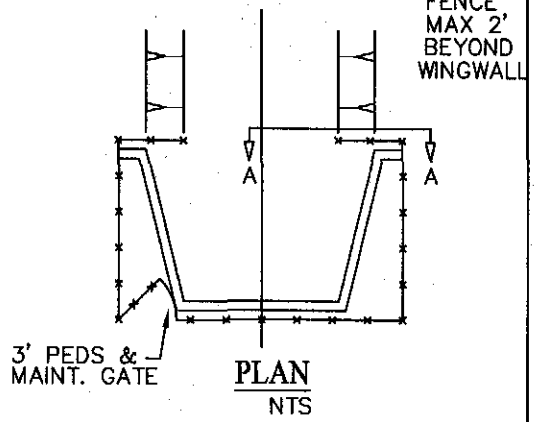

PLAN
NTS

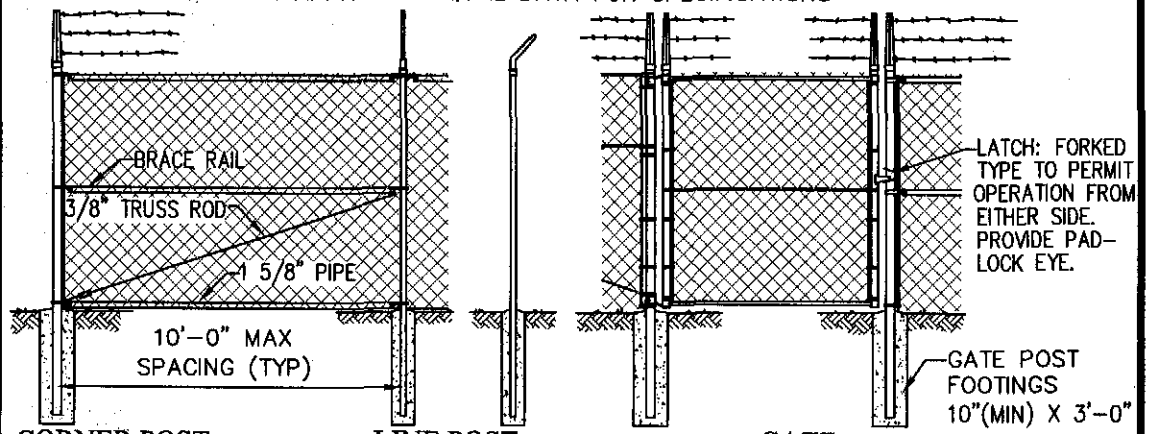

CORNER POST LINE POST GATE

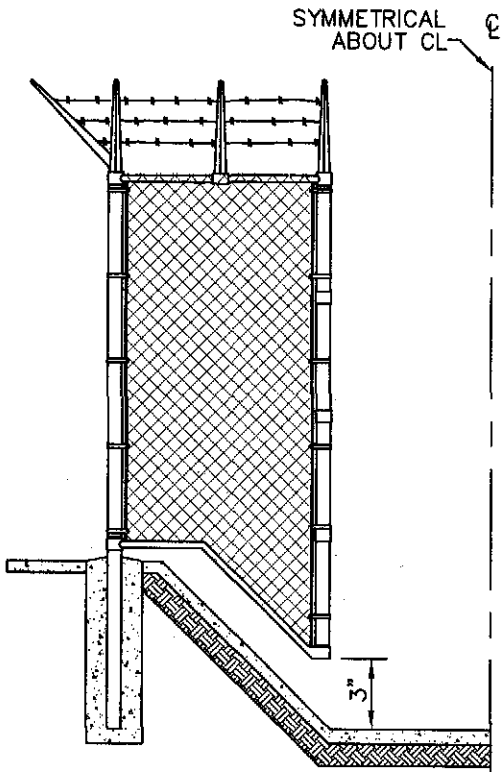

SECTION A-A
NTS

SPECIAL APPLICATION OF FENCING AROUND USBR FACILITIES. DIMENSIONS WILL BE DETERMINED BY FIELD CONDITIONS.

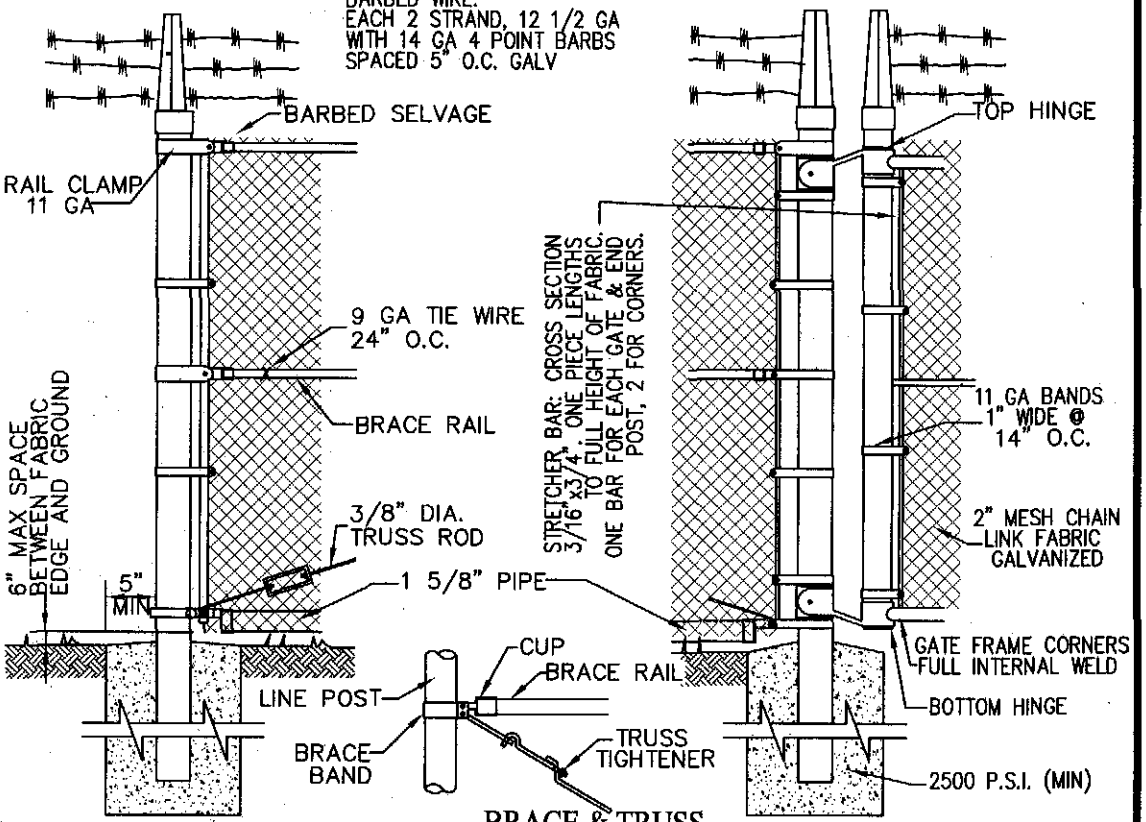

CORNER POST BRACE & TRUSS CONNECTION GATE DETAIL

TITLE 19 - SUBDIVISION ORDINANCE

ENGINEERING DEPARTMENT

DESIGN STANDARDS FOR CONSTRUCTION

CHAINLINK STANDARD DETAILS

4-1

Approved By R. A. SHUBERT Date JUNE 03, 2008

Checked By H. M. E.

Drawn By QEC / J. R.

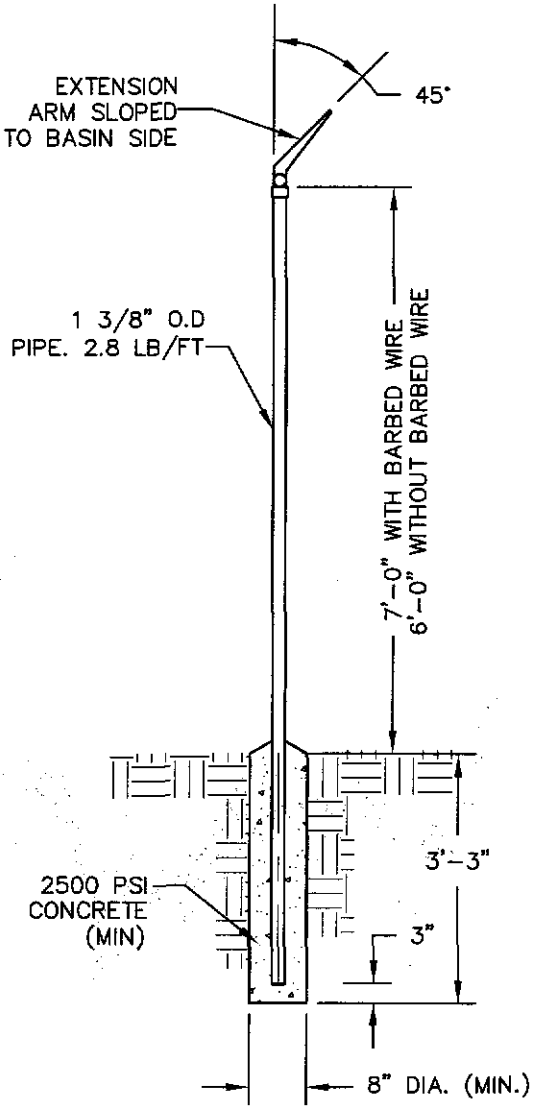

LINE POST
NTS

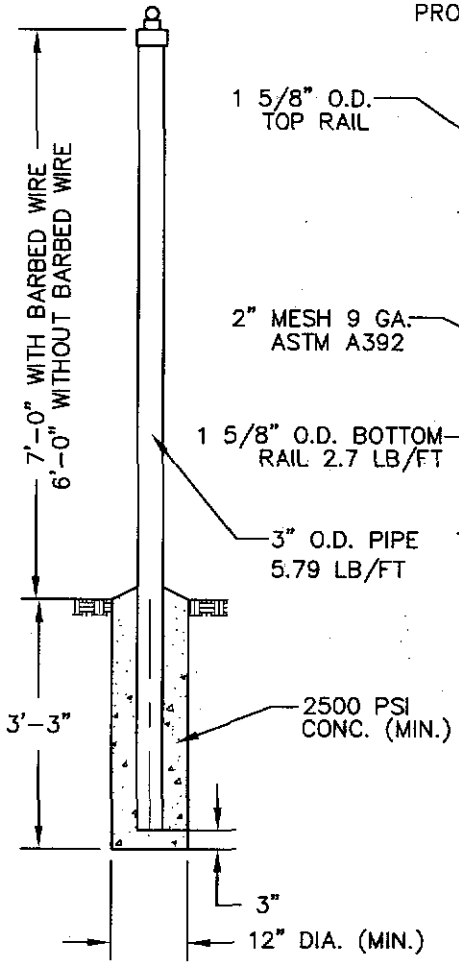

END POST & GATE POST
NTS

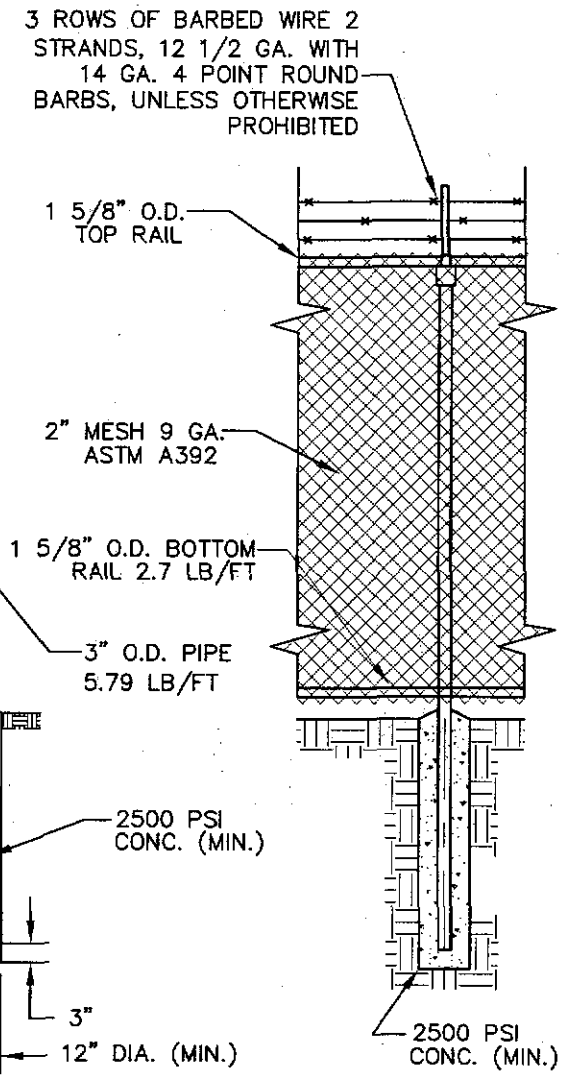

LINE POST W/MESH
NTS

NOTE : ALL PIPE TO BE SCHEDULE 40

TITLE 19 - SUBDIVISION ORDINANCE

ENGINEERING DEPARTMENT

DESIGN STANDARDS FOR CONSTRUCTION

CHAINLINK FENCE
POSTS
4-2

Approved By R. A. SHUBERT	Checked By H. M. E.
Date JUNE 03, 2008	Drawn By QEC / J. R.

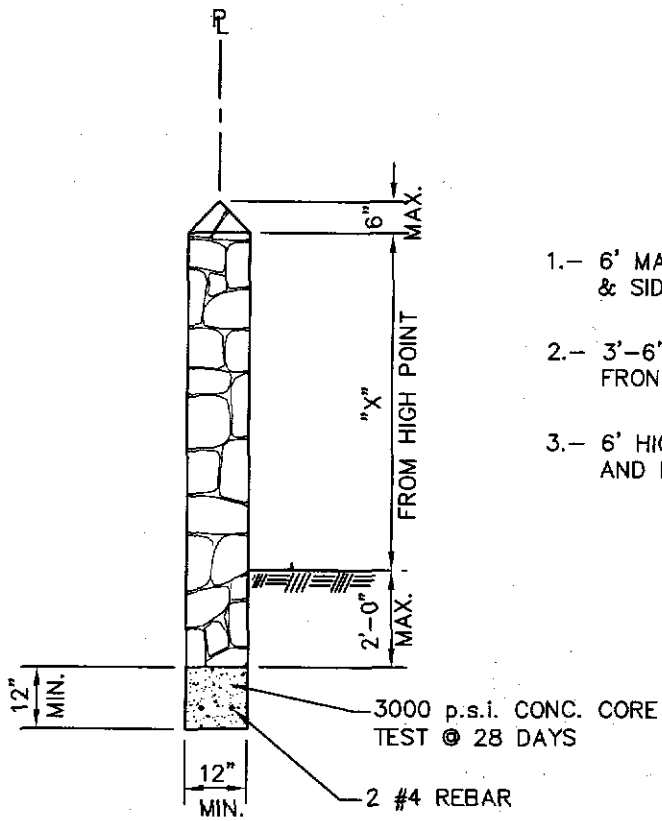

"X"

1.– 6' MAX. ALONG REAR & SIDE YARDS.

2.– 3'–6" MAX. ALONG FRONT YARDS.

3.– 6' HIGH @ DRAINAGE AND BASINS.

ROCKWALL
ADJACENT TO RESIDENTIAL LOTS

NOTES:

1. STONE FOR ROCKWALL SHALL BE AS NEARLY UNIFORM IN SECTIONS AS IS PRACTICABLE. THE STONE SHALL BE DENSE AND RESISTANT TO AIR AND WATER.
2. MORTAR SHALL BE TYPE "S" 1800 P.S.I. AS PER ASTM C270
3. MASONRY WALLS OVER SIX (6) FEET IN HEIGHT AND THOSE USED FOR EARTH RETENTION OVER TWO (2) FEET SHALL BE DESIGNED AS STRUCTURAL WALLS.
4. WALLS ADJACENT TO PONDING AREAS OR DRAINAGE DITCHES MAY BE CONSTRUCTED OF BRICK OR CINDER BLOCK AND SHALL NOT BE LESS THAN SIX (6) FEET HIGH.
5. ROCKWALL MORTAR JOINTS SHALL NOT EXCEED TWO (2) INCHES.
6. PROVIDE ONE (1) INCH EXPANSION JOINTS AT EVERY 100 FEET.
7. ALL STONE SHALL BE THOROUGHLY SOAKED BEFORE BEING PLACED.
8. NO RIVER ROCK SHALL BE ALLOWED FOR ROCKWALLS.

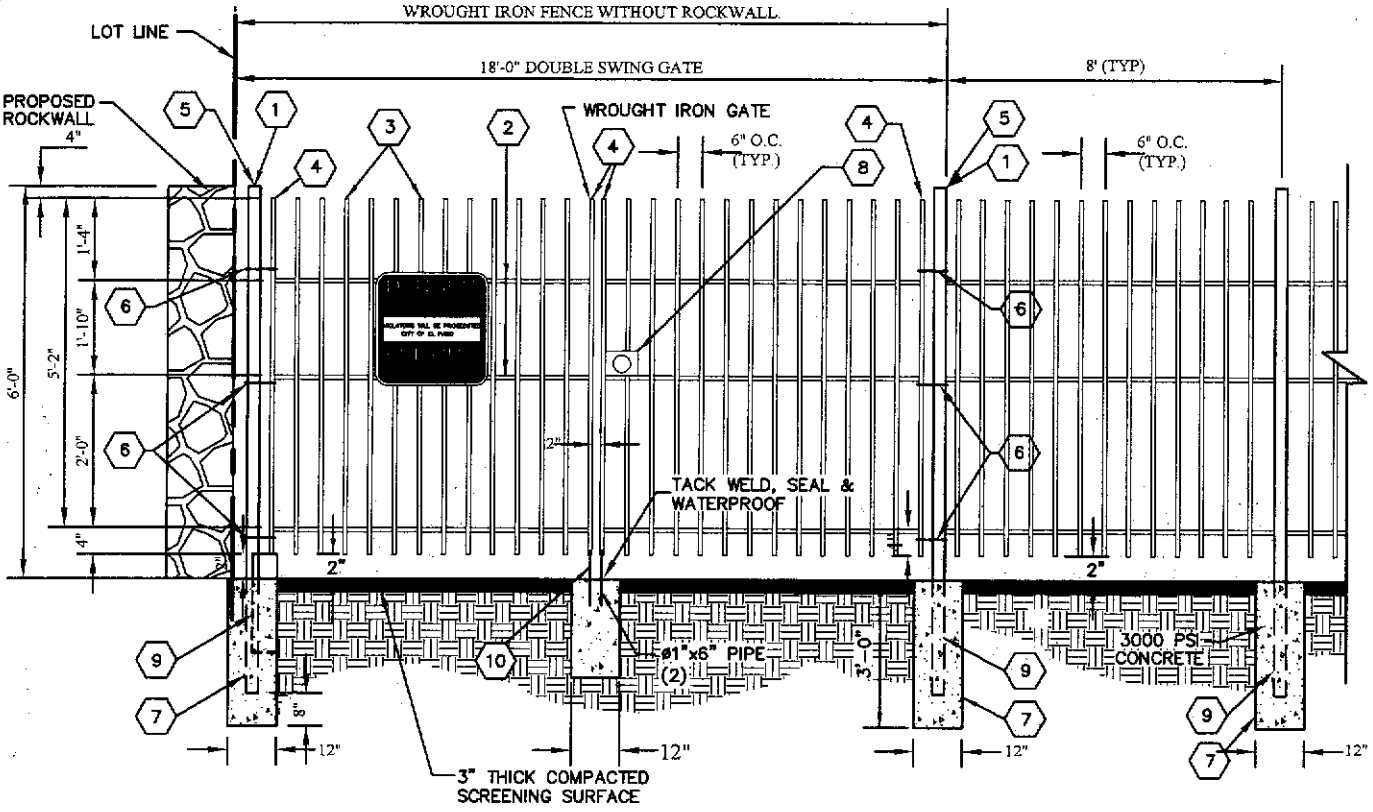

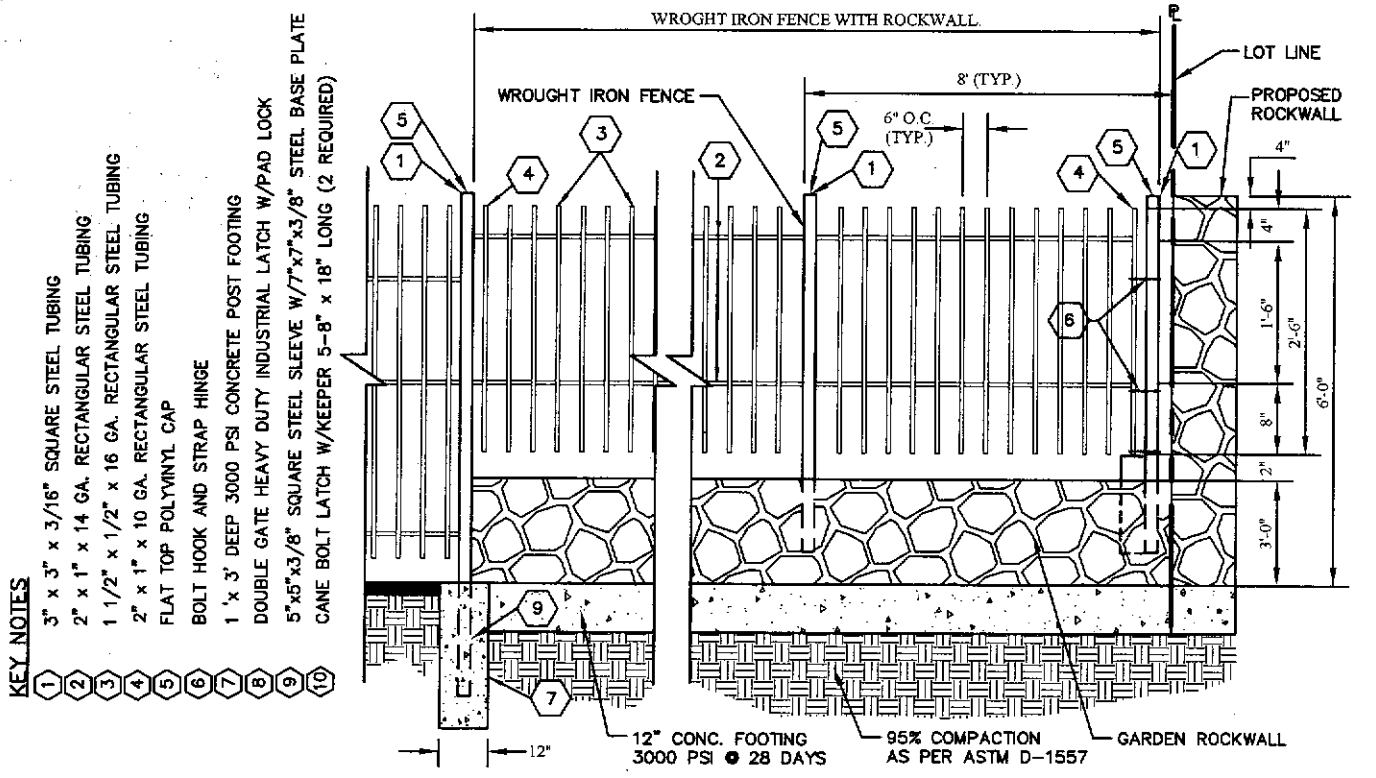

KEY NOTES

1. 3" x 3" x 3/16" SQUARE STEEL TUBING
2. 2" x 1" x 14 GA. RECTANGULAR STEEL TUBING
3. 1 1/2" x 1/2" x 16 GA. RECTANGULAR STEEL TUBING
4. 2" x 1" x 10 GA. RECTANGULAR STEEL TUBING
5. FLAT TOP POLYVINYL CAP
6. BOLT HOOK AND STRAP HINGE
7. 1 'x 3' DEEP 3000 PSI CONCRETE POST FOOTING
8. DOUBLE GATE HEAVY DUTY INDUSTRIAL LATCH W/PAD LOCK
9. 5"x5"x3/8" SQUARE STEEL SLEEVE W/7"x7"x3/8" STEEL BASE PLATE
10. CANE BOLT LATCH W/KEEPER 5-8" x 18" LONG (2 REQUIRED)

WROUGHT IRON FENCE

N.T.S.

TITLE 19 - SUBDIVISION ORDINANCE

ENGINEERING DEPARTMENT

DESIGN STANDARDS FOR CONSTRUCTION

WROUGHT IRON FENCE AND GATE DETAIL 4-4

Approved By R. A. SHUBERT	Checked By H. M. E.
Date JUNE 03, 2008	Drawn By QEC / J. R.

SECTION 5

SECTION 5

EARTH RETENTION AND EROSION CONTROL

TITLE	PAGE
CONCRETE RIP RAP	5-1
ROCK RIP RAP	5-2
WIRE WRAPPED RIP RAP	5-3
TEMPORARY EROSION CONTROL	5-4

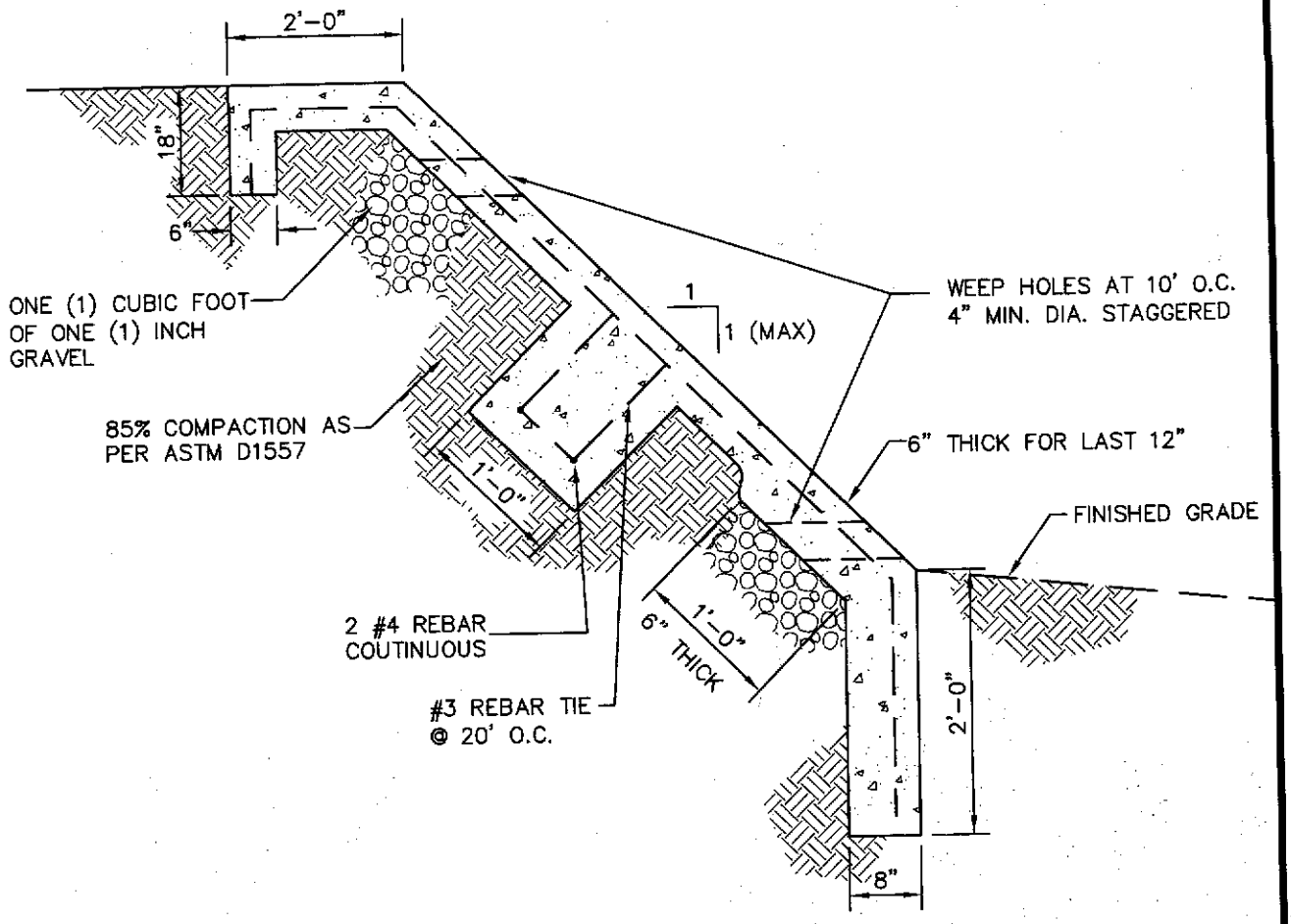

CONCRETE RIP-RAP DETAIL

SCALE: N.T.S.

NOTES:

1. CONCRETE RIP-RAP SHALL BE PLACED ON EMBANKMENTS OR SLOPES WHERE REQUIRED BY THE CITY ENGINEER FOR EROSION PROTECTION, EXCEPT FOR PONDING AREAS. (REFER TO SECTION 2)
2. CONCRETE RIP-RAP SHALL BE A MINIMUM OF 4" CONCRETE.
3. CONCRETE TO BE 3000 PSI WITH MIN. 6x6x#10 WWF
4. FOR SLOPES GREATER THAN 1:1 OR VERTICAL HEIGHT OF MORE THAN SIX(6) FEET, THE RIP-RAP SHALL BE DESIGNED BY A PROFESSIONAL ENGINEER.
5. PROVIDE ONE (1) INCH EXPANSION JOINT AT EVERY FIFTY (50) FEET WITH #6 DOWELS AT 18 INCHES O.C.
6. PROVIDE DUMMY JOINTS AT TEN (10) FEET O.C.

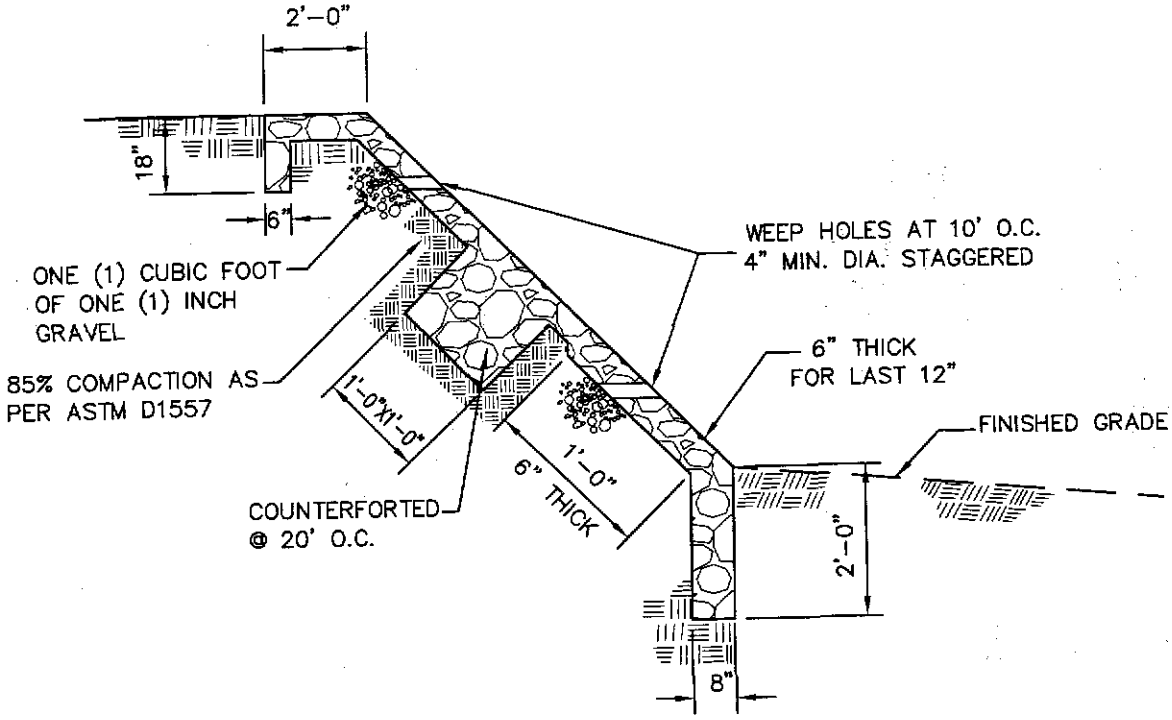

ROCK RIP-RAP DETAIL

NOTES:

1. ROCK RIP-RAP SHALL BE PLACED ON EMBANKMENTS OR SLOPES WHERE REQUIRED BY THE CITY ENGINEER FOR EROSION PROTECTION, EXCEPT FOR PONDING AREAS. (SEE SECTION 2)
2. ROCK RIP-RAP SHALL BE A MINIMUM OF 8" MORTARED ROCK.
3. STONE FOR ROCK RIP RAP SHALL BE AS NEARLY UNIFORM IN SECTION AS IS PRACTICABLE. STONE SHALL BE QUARRIED; FRACTURED RIVERROCK SHALL NOT BE PERMITTED.
4. MORTAR FOR ROCK RIP-RAP SHALL BE TYPE S, 1800 P.S.I. AS PER ASTM C270.
5. FOR SLOPES GREATER THAN 1:1 OR VERTICAL HEIGHT OF MORE THAN SIX (6) FEET, THE RIP RAP SHALL BE DESIGNED BY A PROFESSIONAL ENGINEER.
6. PROVIDE ONE (1) INCH EXPANSION JOINT AT EVERY FIFTY (50) FEET.
7. PROVIDE DUMMY JOINTS AT TEN (10) FEET O.C.
8. NON-MORTARED ROCK RIP RAP SHALL BE ALLOWED WHERE APPROVED BY THE CITY ENGINEER.

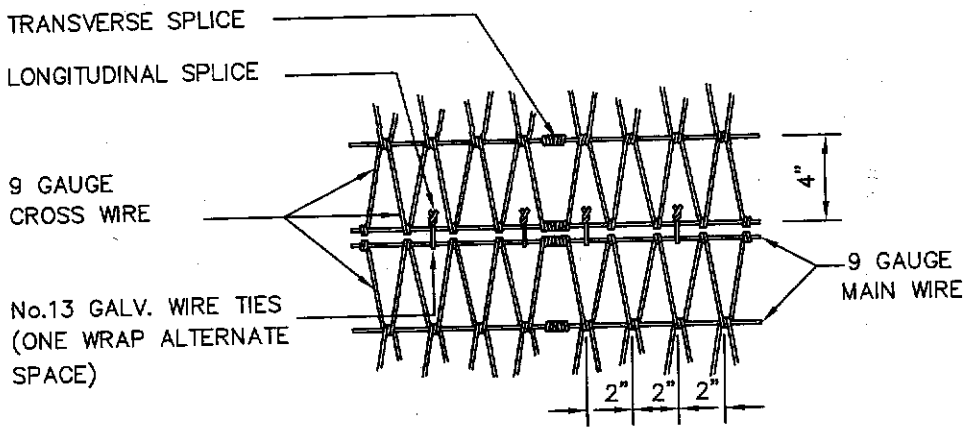

WIRE FABRIC AND SPLICE DETAIL (FOR NON-COHESIVE SOIL)

N.T.S.

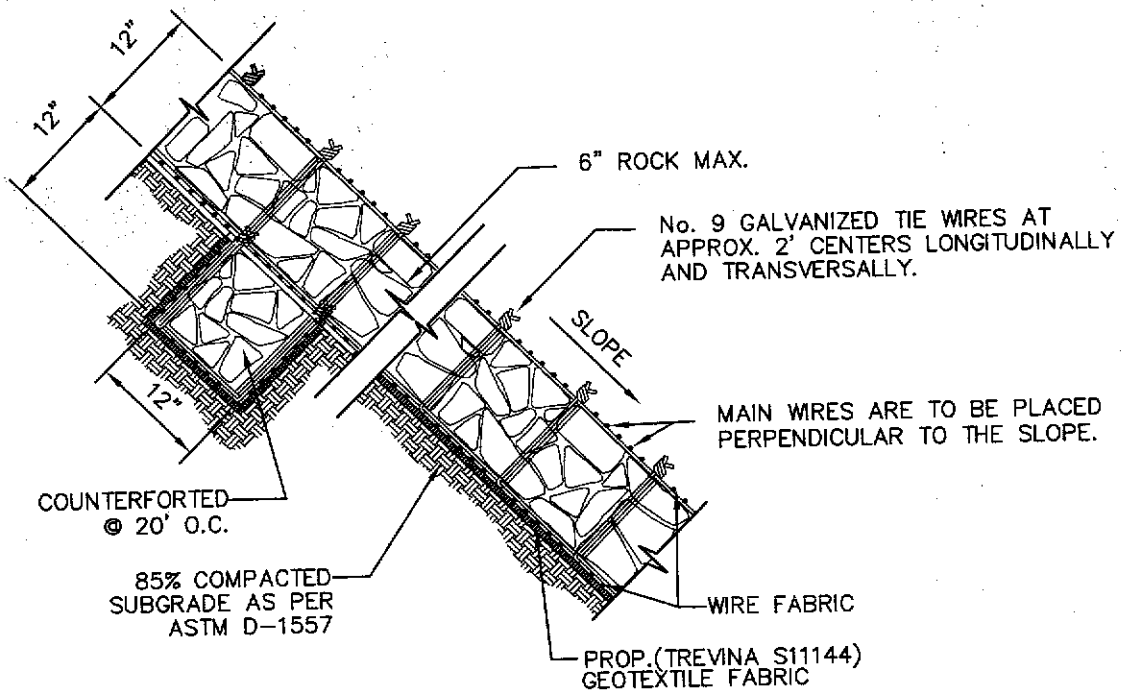

TYPICAL SECTION

WIRE WRAPPED RIP-RAP DETAIL

N.T.S.

TITLE 19 - SUBDIVISION ORDINANCE

ENGINEERING DEPARTMENT

DESIGN STANDARDS
FOR CONSTRUCTION

WIRE WRAPPED
RIP RAP
5-3

Approved By R. A. SHUBERT	Checked By H. M. E.
Date JUNE 03, 2008	Drawn By QEC / J. R.

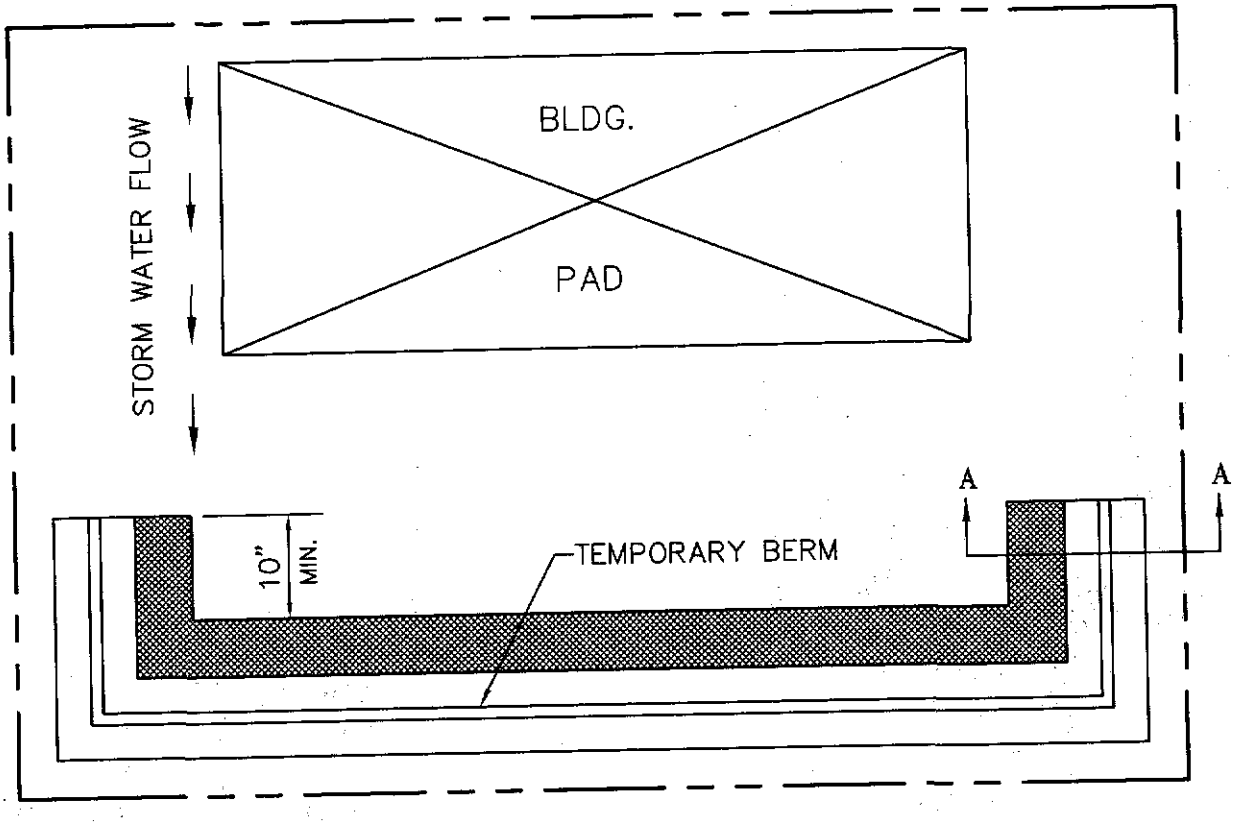

TYPICAL LOT LAYOUT FOR EROSION CONTROL

N.T.S.

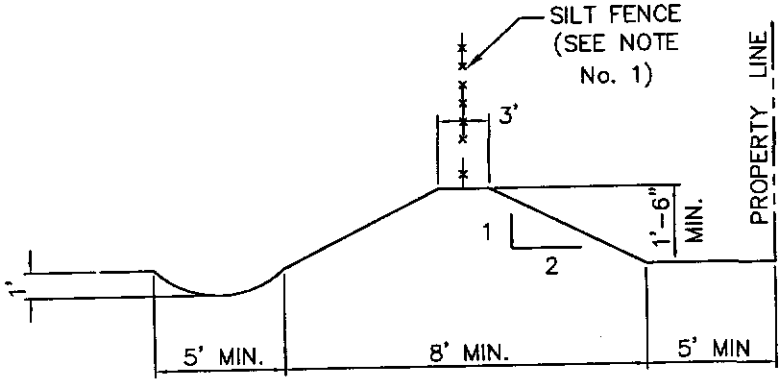

NOTE:

1.– SILT FENCE SHALL BE PROVIDED PRIOR TO GRADING OF SITE AND IF THE SITE HAS SANDY SOIL CONDITIONS.

TITLE 19 - SUBDIVISION ORDINANCE

ENGINEERING DEPARTMENT

DESIGN STANDARDS FOR CONSTRUCTION

TEMPORARY EROSION CONTROL

5-4

Approved By R. A. SHUBERT	Checked By H. M. E.
Date JUNE 03, 2008	Drawn By QEC / J. R.

SECTION 6

SECTION 6

SIDEWALKS, DRIVEWAYS AND CURB RAMPS

TITLE	PAGE
CURB WITH SIDEWALK SECTION	6-1
SIDEWALK ADJACENT TO CURB SECTION	6-2
CURB WITH SIDEWALK SECTION	6-3
ROLLED CURB SECTIONS	6-4
ROLLED CURB SECTIONS WITH SIDEWALK AGAINST CURB	6-5
TYPE "A" CURB AND GUTTER	6-6
TYPE "B" AND "C" CURB AND GUTTER	6-7
TYPE "D" CURB AND GUTTER	6-8
TYPE "E" CURB	6-9
TEMPORARY CURBS TYPE "F" AND "G"	6-10
TYPE "H" DRIVEWAY CURB	6-11
CONCRETE HEADER WITH SIDEWALK SECTION	6-12
SIDEWALK FOR ON-SITE PONDING	6-13
ACCESSIBLE PASSING SPACE DESIGN	6-14
RESIDENTIAL DRIVEWAYS	6-15
COMMERCIAL/INDUSTRIAL DRIVEWAYS	6-15A
DRIVEWAY APPROACHES	6-16
CONCRETE APRON FOR DRIVEWAYS/ALLEYWAYS	6-17
DRIVEWAY WITH ON-SITE PONDING	6-18
ASPHALTIC WALKWAY/JOGGING PATH	6-19
STRAIGHT CURB RAMP DESIGN WITH CURB RETURNS	6-20
DIAGONAL CURB RAMP DESIGN WITH CURB RETURNS	6-21

SECTION 6

SIDEWALKS, DRIVEWAYS AND CURB RAMPS

TITLE	PAGE
DIAGONAL CURB RAMP DESIGN WITH FLARED SIDES	6-22
STRAIGHT CURB RAMP DESIGN WITH FLARED SIDES	6-23
WHEEL CHAIR CURB RAMP WIDTH	6-24
RAMP SURFACE	6-25
TRANSITION RAMP WITH DETECTABLE WARNING	6-26
LOCATION OF DETECTABLE WARNINGS ON VARIOUS RAMPS	6-27
DOME SIZE AND SPACING	6-28
BUILT-UP CURB RAMP	6-29
DIAGONAL SHARED RAMP	6-30
CURB RAMPS AT MEDIAN ISLANDS	6-31
MEDIAN CURB RAMP DESIGN (ARTERIAL)	6-32
MEDIAN CURB RAMP DESIGN (LOCAL)	6-33

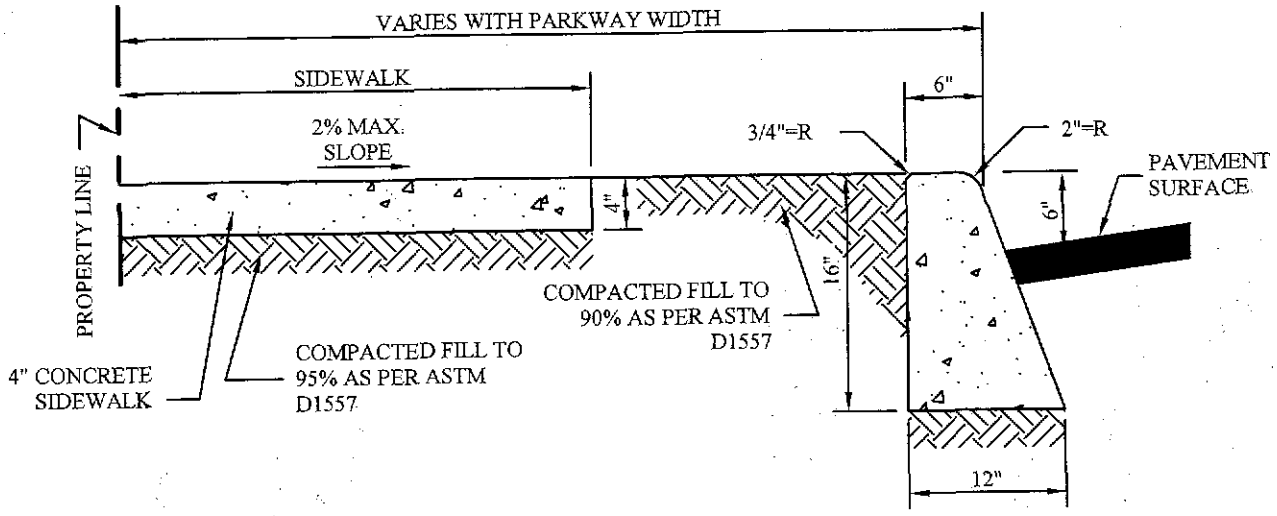

STANDARD CURB & SIDEWALK SECTION

NOTES:

1. CONCRETE SHALL BE 3000 P.S.I. MIN.
2. DUMMY JOINT REQUIRED AT 10' O.C. FOR CURB & GUTTER AND 5' O.C. FOR SIDEWALK.
3. EXPANSION MATERIAL REQUIRED AT CURB RETURNS AND AT 20' ON CENTER FOR SIDEWALKS WITH 1/2" PREMOLDED ASPHALT IMPREGNATED EXPANSION MATERIAL OR EQUAL.
4. EXPANSION JOINTS REQUIRED AT 50' O.C. WHEN FORMING FOR CURBS.

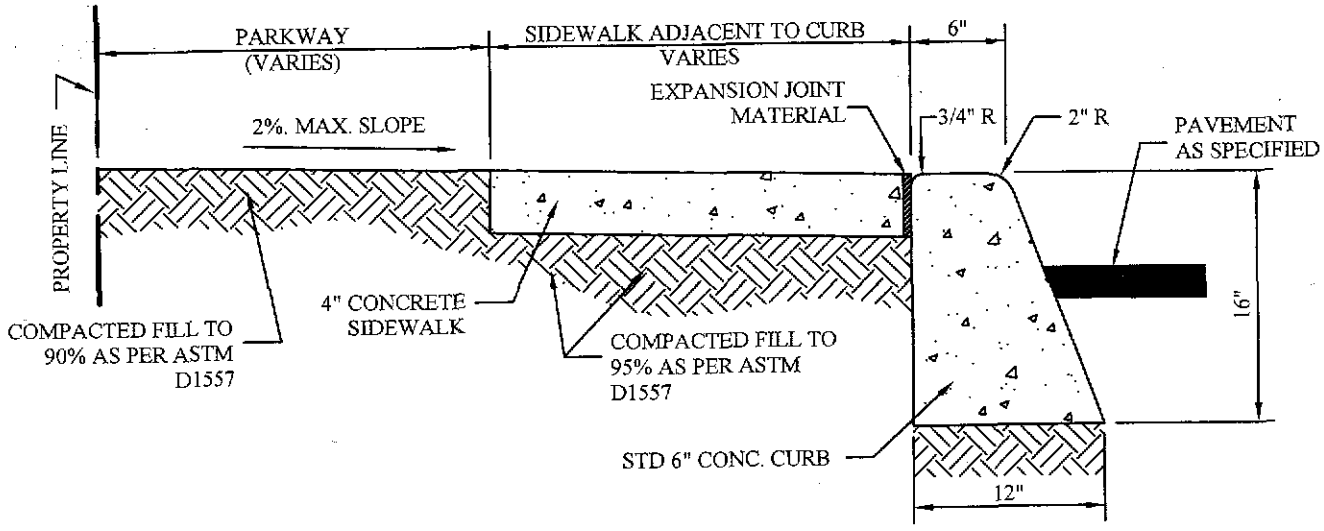

STANDARD 6" CURB WITH SIDEWALK SECTION

TITLE 19 - SUBDIVISION ORDINANCE

ENGINEERING DEPARTMENT

DESIGN STANDARDS FOR CONSTRUCTION

CURB WITH SIDEWALK SECTION

6-1

Approved By R. A. SHUBERT	Checked By H. M. E.
Date JUNE 03, 2008	Drawn By QEC / J. R.

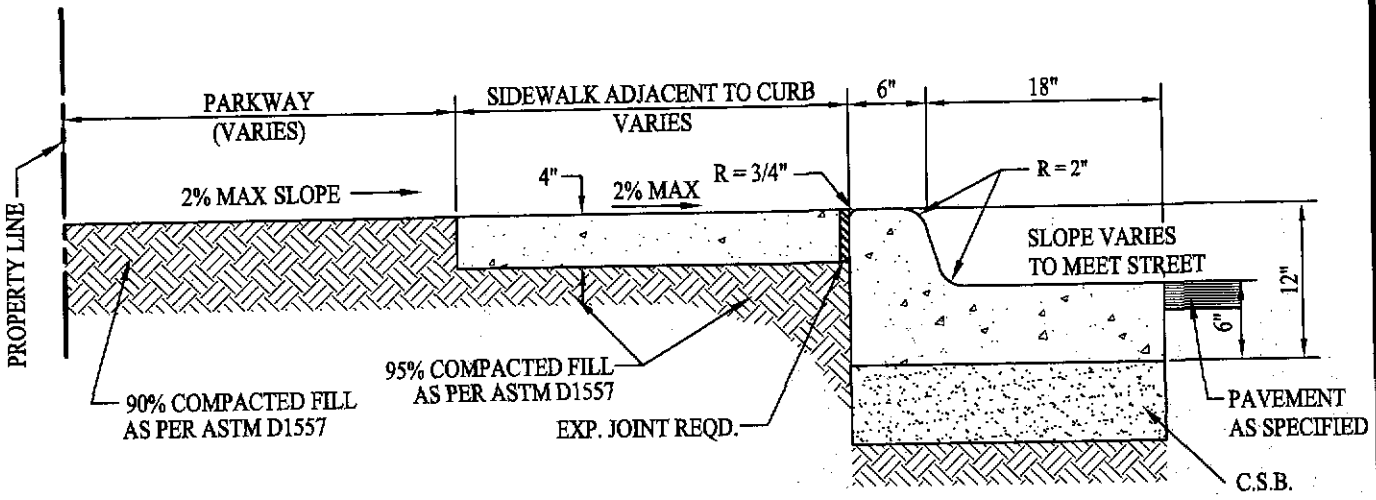

CURB & GUTTER WITH SIDEWALK SECTION

C.S.B.

NOTES:

1. CONCRETE SHALL BE 3000 P.S.I. MIN.
2. DUMMY JOINT REQUIRED AT 10' O.C. FOR CURB & GUTTER AND 5'O.C. FOR SIDEWALK.
3. EXPANSION MATERIAL REQUIRED AT CURB RETURNS, AND AT 20' ON CENTER FOR SIDEWALKS WITH 1/2" PREMOLDED ASPHALT IMPREGNATED EXPANSION MATERIAL OR EQUAL.
4. EXPANSION JOINTS REQUIRED AT 50' O.C. WHEN FORMING FOR CURBS.

TITLE 19 - SUBDIVISION ORDINANCE

ENGINEERING DEPARTMENT

DESIGN STANDARDS FOR CONSTRUCTION

SIDEWALK ADJACENT TO CURB SECTION
6-2

Approved By R. A. SHUBERT	Checked By H. M. E.
Date JUNE 03, 2008	Drawn By QEC / J. R.

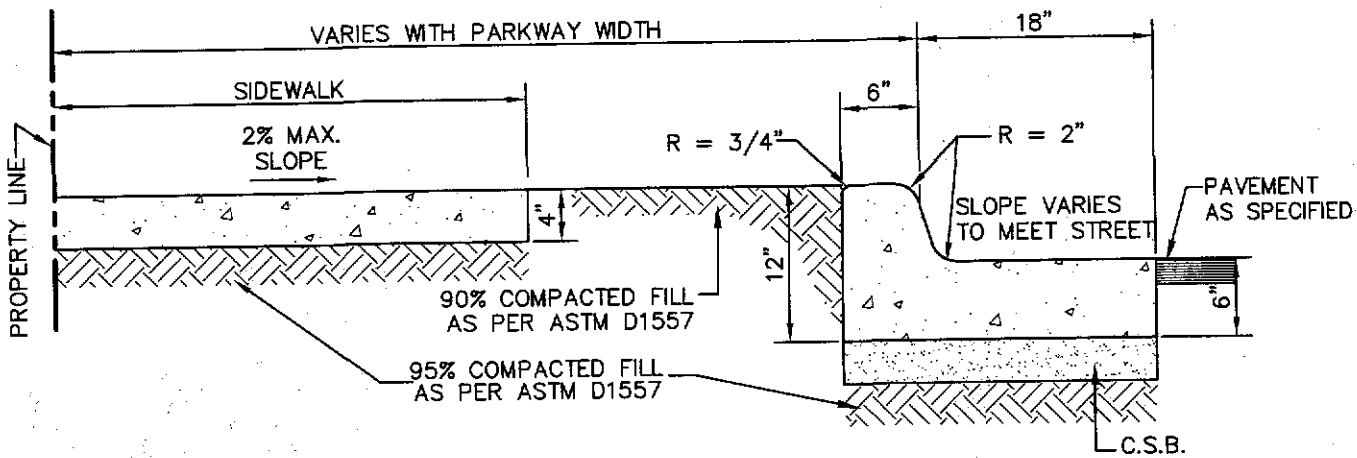

CURB & GUTTER WITH SIDEWALK SECTION

NOTES:

1. CONCRETE SHALL BE 3000 P.S.I. MIN.
2. DUMMY JOINT REQUIRED AT 10' O.C. FOR CURB & GUTTER AND 5' O.C. FOR SIDEWALK.
3. EXPANSION MATERIAL REQUIRED AT CURB RETURNS AND AT 20' ON CENTER FOR SIDEWALKS WITH 1/2" PREMOLDED ASPHALT IMPREGNATED EXPANSION MATERIAL OR EQUAL.
4. EXPANSION JOINTS REQUIRED AT 50' O.C. WHEN FORMING FOR CURBS.

TITLE 19 - SUBDIVISION ORDINANCE

ENGINEERING DEPARTMENT

DESIGN STANDARDS
FOR CONSTRUCTION

CURB WITH
SIDEWALK SECTION
6-3

Approved By R. A. SHUBERT	Checked By H. M. E.
Date JUNE 03, 2008	Drawn By QEC / J. R.

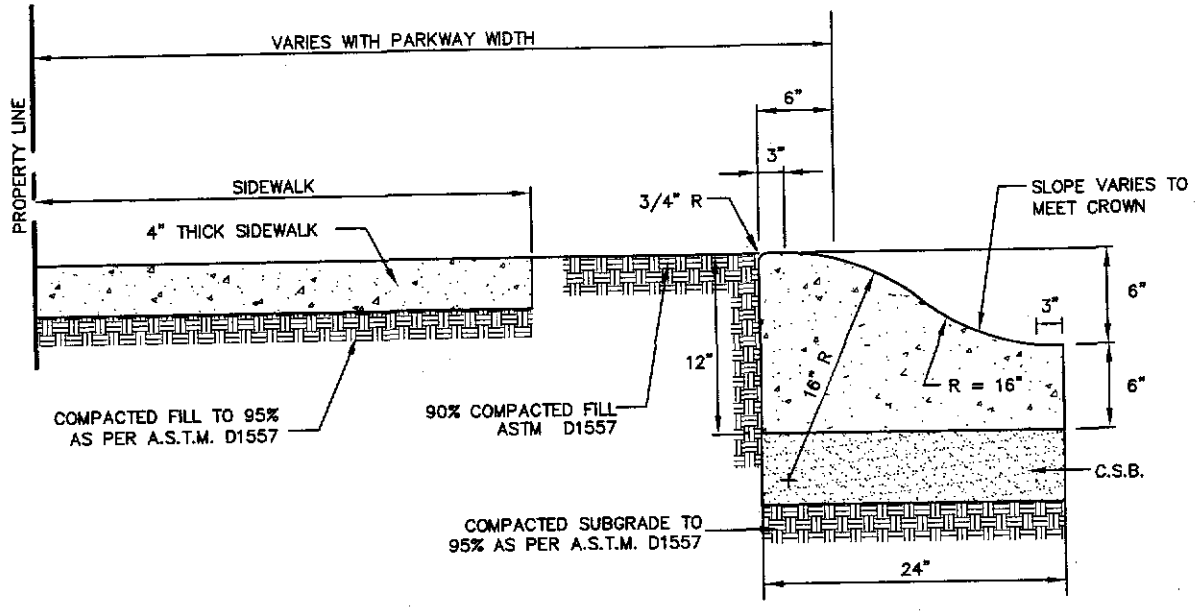

6" ROLLED CURB WITH SIDEWALK SECTION

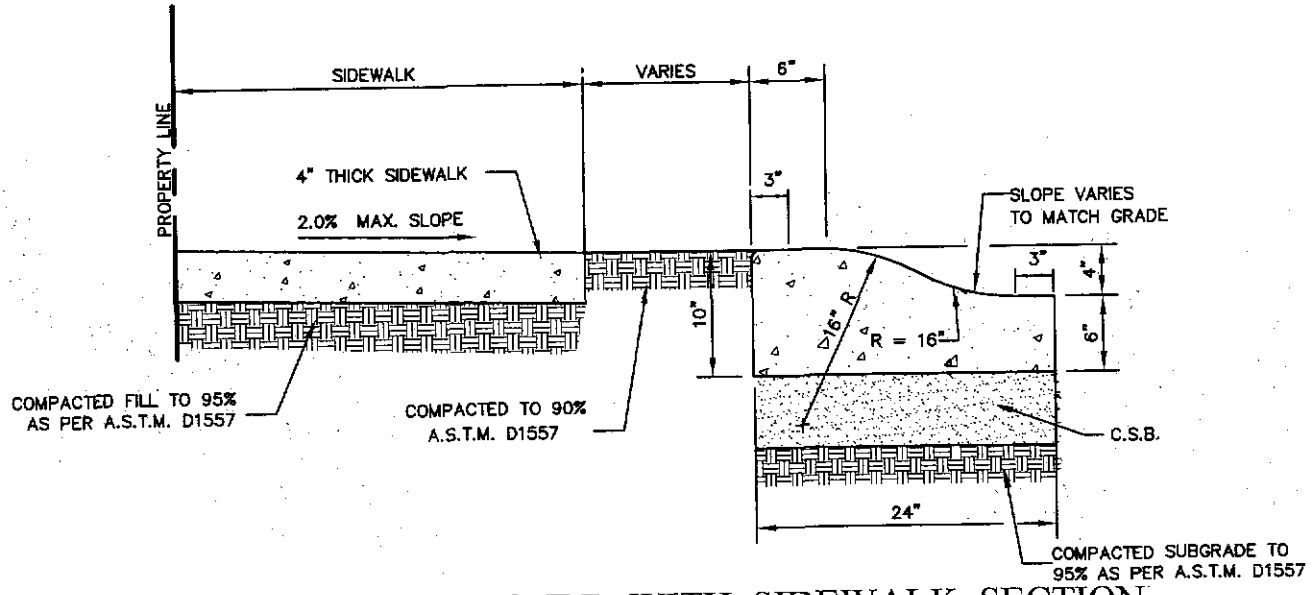

4" ROLLED CURB WITH SIDEWALK SECTION

NOTES:
1. CONCRETE SHALL BE 3000 P.S.I. MINIMUM.
2. DUMMY JOINT REQUIRED AT 10' O.C. FOR HEADERS AND 5' O.C. FOR SIDEWALK.
3. EXPANSION JOINT MATERIAL REQUIRED AT CURB RETURNS, AND AT 20' O.C. FOR SIDEWALKS WITH 1/2" PRE-MOLDED ASPHALT IMPREGNATED EXPANSION MATERIAL.
4. EXPANSION JOINTS REQUIRED AT 50' O.C. WHEN FORMING FOR HEADERS.
5. PROVIDE EXPANSION JOINT MATERIAL WHERE SIDEWALK MEETS CURB, AND AT ALL SIDES WHERE CONCRETE PARKWAY MEETS SIDEWALK AND CURB.

TITLE 19 - SUBDIVISION ORDINANCE

ENGINEERING DEPARTMENT

DESIGN STANDARDS FOR CONSTRUCTION

ROLLED CURB SECTIONS
6-4

Approved By R. A. SHUBERT	Checked By H. M. E.
Date JUNE 03, 2008	Drawn By QEC / J. R.

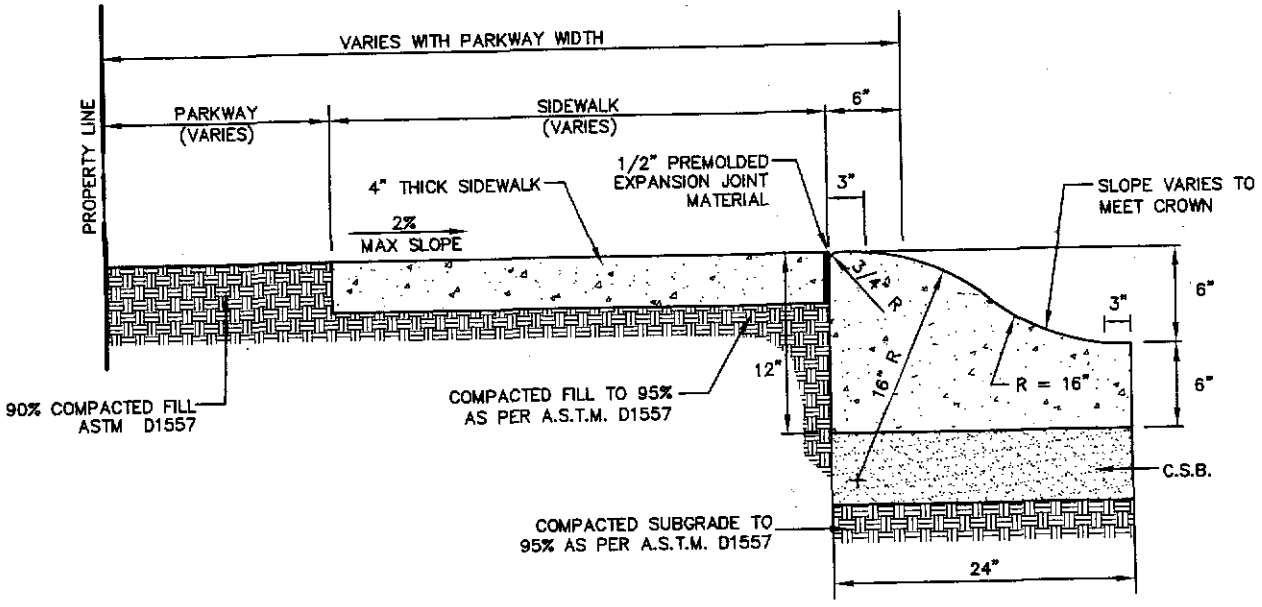

6" ROLLED CURB WITH SIDEWALK SECTION

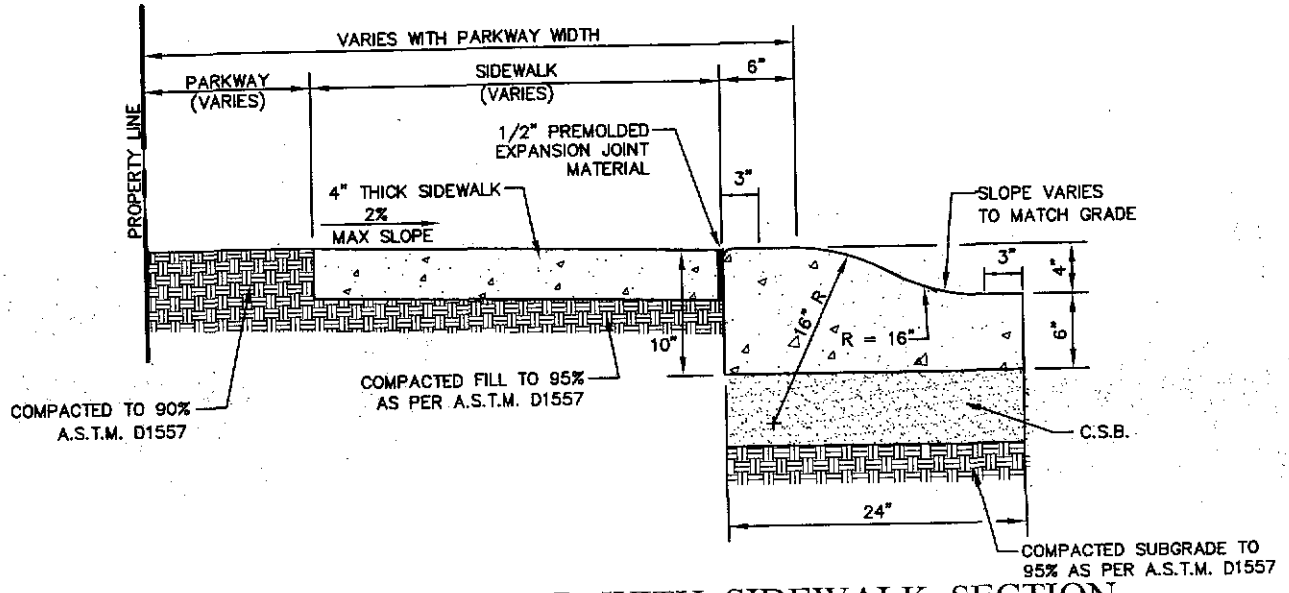

4" ROLLED CURB WITH SIDEWALK SECTION

NOTES:
1. CONCRETE SHALL BE 3000 P.S.I. MINIMUM.
2. DUMMY JOINT REQUIRED AT 10' O.C. FOR HEADERS AND 5' O.C. FOR SIDEWALK.
3. EXPANSION JOINT MATERIAL REQUIRED AT CURB RETURNS, AND AT 20' O.C. FOR SIDEWALKS WITH 1/2" PRE-MOLDED ASPHALT IMPREGNATED EXPANSION MATERIAL.
4. EXPANSION JOINTS REQUIRED AT 50' O.C. WHEN FORMING FOR HEADERS.
5. PROVIDE EXPANSION JOINT MATERIAL WHERE SIDEWALK MEETS CURB, AND AT ALL SIDES WHERE CONCRETE PARKWAY MEETS SIDEWALK AND CURB.

TITLE 19 - SUBDIVISION ORDINANCE

ENGINEERING DEPARTMENT

DESIGN STANDARDS FOR CONSTRUCTION

ROLLED CURB SECTIONS WITH SIDEWALK AGAINIST CURB

6-5

Approved By R. A. SHUBERT	Checked By H. M. E.
Date JUNE 03, 2008	Drawn By QEC / J. R.

THE FOLLOWING CURB STANDARDS (PLATES 6-6 THROUGH 6-11) CAN ONLY BE USED WITH APPROVAL BY THE CITY ENGINEER:

FOR USE ON ALL CITY STREETS WHERE THE ROADWAY IS SUPERELEVATED. I.E. THE PAVEMENT SLOPES AWAY FROM THE CURB AND DRAINAGE IS TO BE DIVERTED FROM THE GUTTER SECTION.

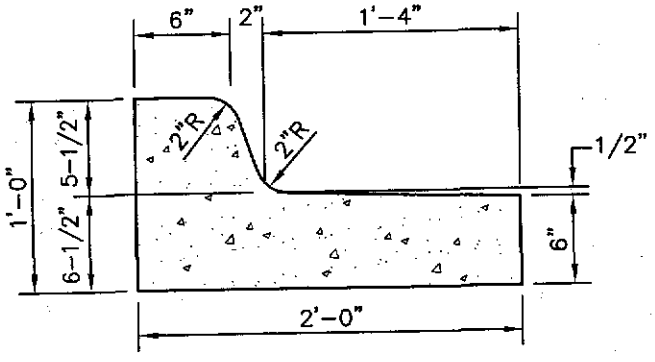

TYPE "A" MODIFIED CURB & GUTTER

N.T.S.

TITLE 19 - SUBDIVISION ORDINANCE

ENGINEERING DEPARTMENT

DESIGN STANDARDS FOR CONSTRUCTION

TYPE "A" MODIFIED CURB AND GUTTER
6-6

Approved By R. A. SHUBERT	Checked By H. M. E.
Date JUNE 03, 2008	Drawn By QEC / J. R.

FOR USE ON ALL CITY STREET CLASSIFICATIONS AS A FUNCTION OF DRAINAGE AND TRAFFIC CONTROL. IT IS PERMISSIBLE TO MIX CURB HEIGHTS OF 6" & 8" WHEN APPROPRIATE FOR PROPER DRAINAGE CONVEYANCE. MINIMUM TRANSITION LENGTH OF 10' FROM 6" TO 8" CURB.
8" CURB NOT RECOMMENDED FOR STREETS WITH ON-STREET PARKING.

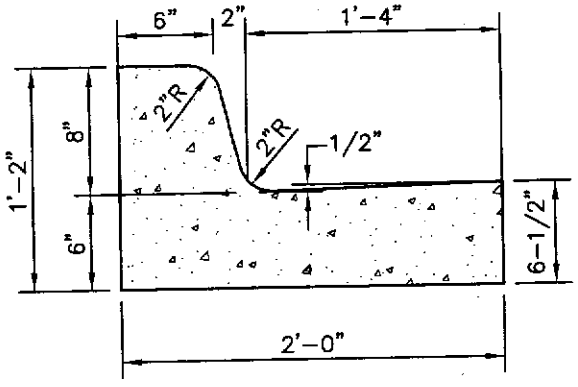

TYPE "B" 8" CURB & GUTTER

N.T.S.

FOR USE ON CITY STREETS WHERE THE ROADWAY IS SUPERELEVATED, I.E. THE PAVEMENT SLOPES AWAY FROM THE CURB AND DRAINAGE IS TO BE DIVERTED.

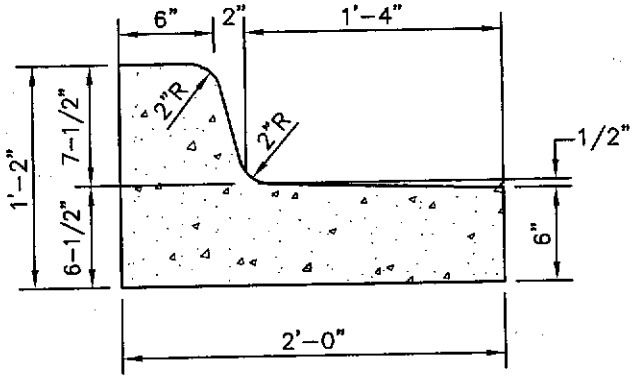

TYPE "C" 8" MODIFIED CURB & GUTTER

N.T.S.

TITLE 19 - SUBDIVISION ORDINANCE

ENGINEERING DEPARTMENT

DESIGN STANDARDS FOR CONSTRUCTION

TYPE "B" AND "C" CURB AND GUTTER
6-7

Approved By R. A. SHUBERT	Checked By H. M. E.
Date JUNE 03, 2008	Drawn By QEC / J. R.

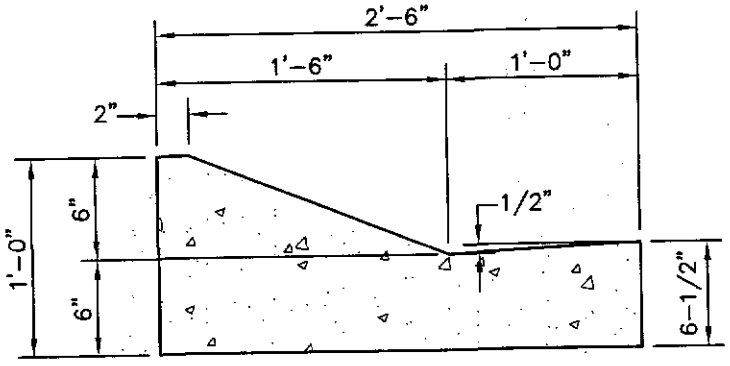

TYPE "D" DRIVE OVER CURB & GUTTER

N.T.S.

TITLE 19 - SUBDIVISION ORDINANCE

ENGINEERING DEPARTMENT

DESIGN STANDARDS FOR CONSTRUCTION

TYPE "D" CURB AND GUTTER

6-8

Approved By R. A. SHUBERT	Checked By H. M. E.
Date JUNE 03, 2008	Drawn By QEC / J. R.

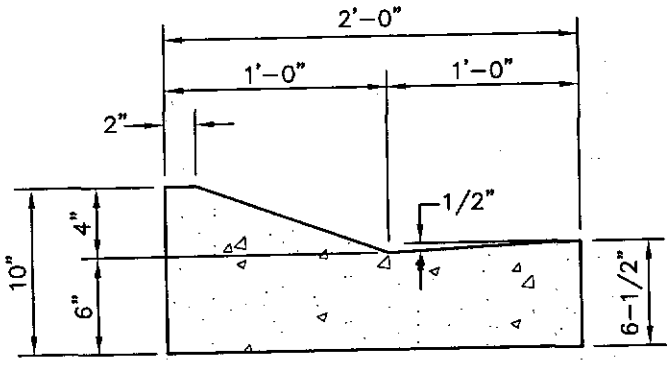

TYPE "E" DRIVE OVER CURB & GUTTER

N.T.S.

TITLE 19 - SUBDIVISION ORDINANCE

ENGINEERING DEPARTMENT

DESIGN STANDARDS FOR CONSTRUCTION

TYPE "E" CURB

6-9

Approved By R. A. SHUBERT	Checked By H. M. E.
Date JUNE 03, 2008	Drawn By QEC / J. R.

FOR USE ON STREETS WHERE THE ESTIMATED EXPANSION OF THE ROAD IS TO OCCUR WITHIN THE NEXT FIVE (5) YEARS.

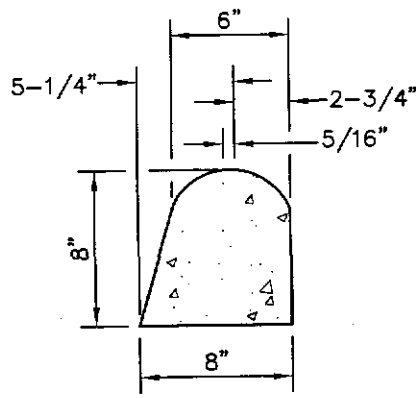

TYPE "F" TEMPORARY ASPHALT CURB

N.T.S.

FOR USE ON STREETS WHEN EXPANSION TO THE CENTER IS PLANNED IN EXCESS OF FIVE (5) YEARS. NO DRAINAGE IS TO BE CONVEYED IN OR ON THE MEDIAN. CURB IS TO BE REMOVED.

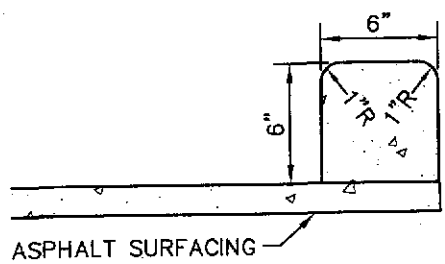

TYPE "G" TEMPORARY EXTRUDED CONCRETE MEDIAN CURB

N.T.S.

TITLE 19 - SUBDIVISION ORDINANCE

ENGINEERING DEPARTMENT

DESIGN STANDARDS FOR CONSTRUCTION

TEMPORARY CURB
TYPES "F" AND "G"
6-10

Approved By R. A. SHUBERT	Checked By H. M. E.
Date JUNE 03, 2008	Drawn By QEC / J. R.

CAN BE USED ON DRIVEWAYS WITH APPROVAL BY THE CITY ENGINEER: EXCEPT WHERE ROLLOVER OR MOUNTABLE CURBING IS INSTALLED.

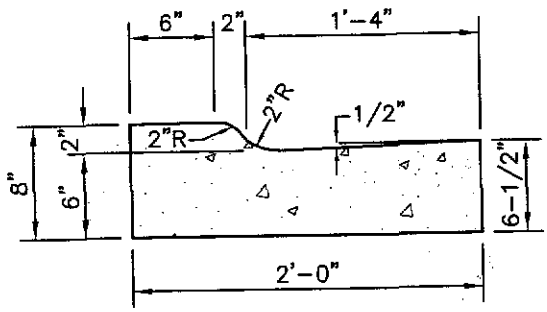

TYPE "H" DRIVEWAY CURB

N.T.S.

TITLE 19 - SUBDIVISION ORDINANCE

ENGINEERING DEPARTMENT

DESIGN STANDARDS FOR CONSTRUCTION

TYPE "H"
DRIVEWAY CURB
6-11

Approved By R. A. SHUBERT	Checked By H. M. E.
Date JUNE 03, 2008	Drawn By QEC / J. R.

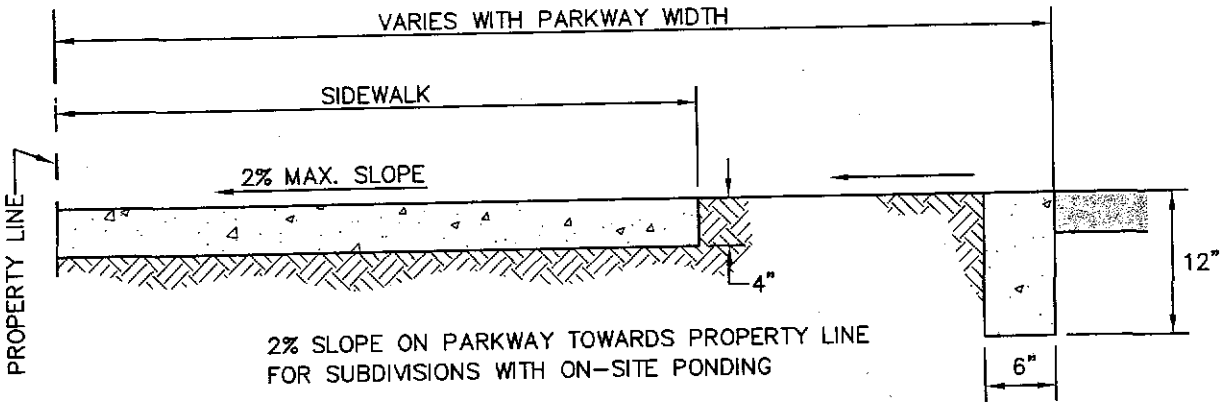

HEADER FOR EXPANSIVE SOIL

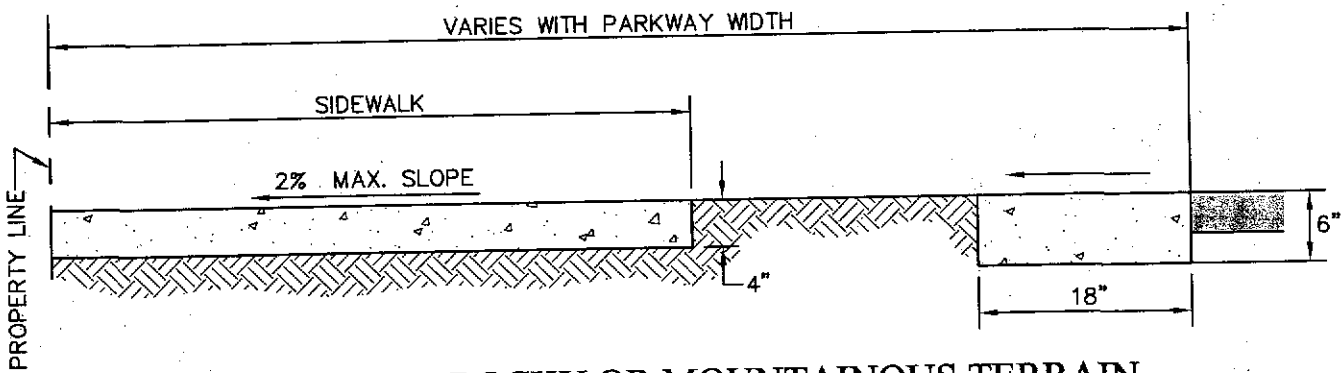

HEADER FOR ROCKY OR MOUNTAINOUS TERRAIN

NOTES:

1. CONCRETE TO BE 3000 P.S.I. MIN.
2. DUMMY JOINT REQUIRED AT 10' O.C. FOR HEADERS AND 5' O.C. FOR SIDEWALKS.
3. EXPANSION MATERIAL REQUIRED AT CURB RETURNS AND AT 20" O.C. FOR SIDEWALKS WITH 1/2" PREMOLDED ASPHALT IMPREGNATED EXPANSION MATERIAL OR EQUAL.
4. EXPANSION JOINTS REQUIRED AT 50' O.C. WHEN FORMING FOR HEADERS.
5. EXPANSION JOINTS REQUIRED FOR SIDEWALK AT 20' O.C.

TITLE 19 - SUBDIVISION ORDINANCE

ENGINEERING DEPARTMENT

DESIGN STANDARDS FOR CONSTRUCTION

CONCRETE HEADER WITH SIDEWALK SECTION
6-12

Approved By R. A. SHUBERT	Checked By H. M. E.
Date JUNE 03, 2008	Drawn By QEC / J. R.

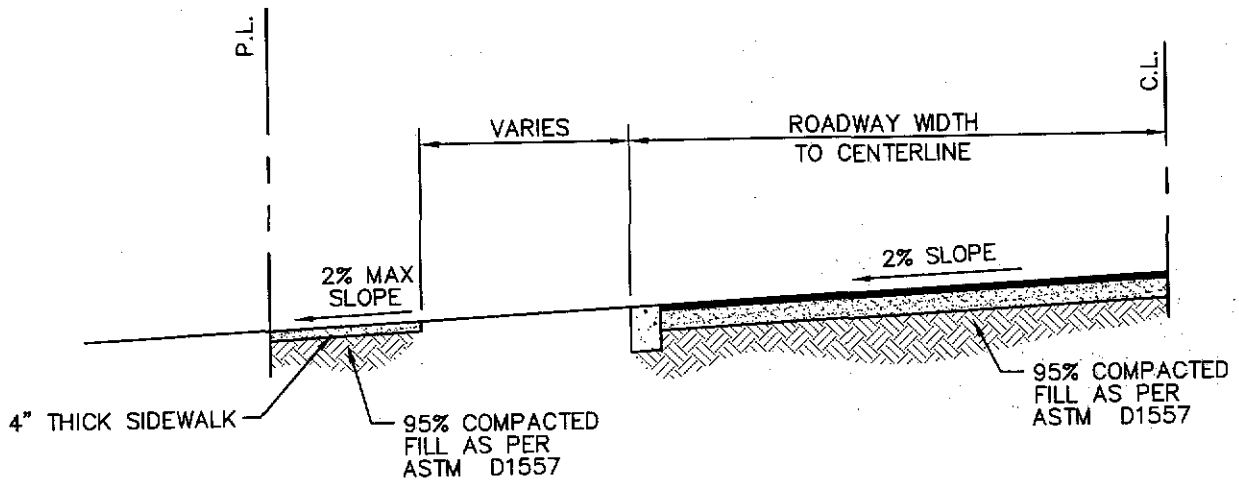

SIDEWALK FOR ON-SITE PONDING

NOTES:

1. CONCRETE FOR HEADERS AND SIDEWALKS SHALL BE 3000 P.S.I. (MIN.).
2. DUMMY JOINT AT 5'-0" O.C., MINIMUM 1/2" PREMOLDED ASPHALT IMPREGNATED EXPANSION JOINT AT 20' O.C. (SIDEWALK ONLY)

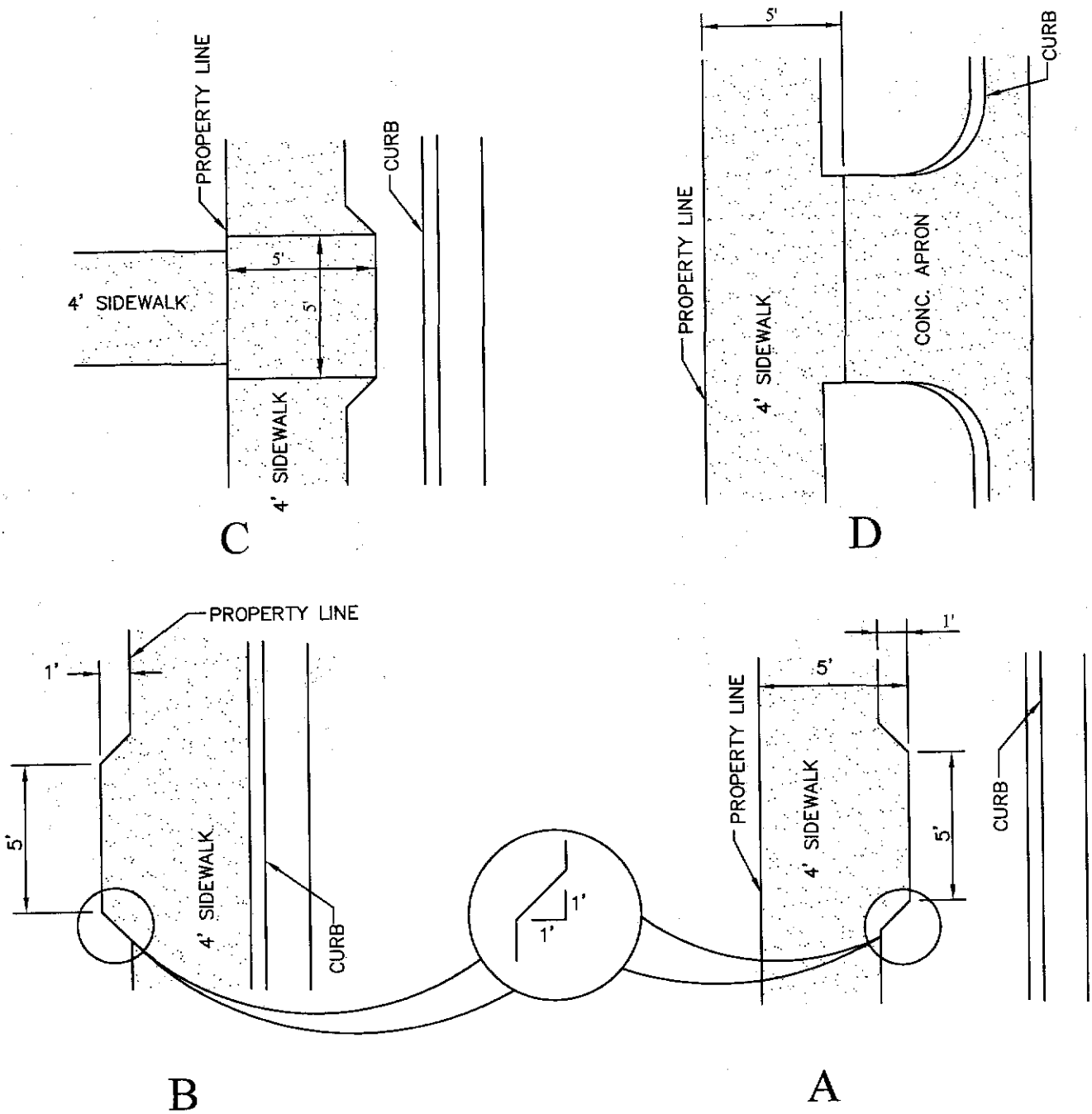

ACCESSIBLE PASSING SPACE DESIGN FOR 4 FT. SIDEWALKS

(SHALL BE SPACED AT EVERY 200' MAXIMUM)

TITLE 19 - SUBDIVISION ORDINANCE

ENGINEERING DEPARTMENT

DESIGN STANDARDS FOR CONSTRUCTION

ACCESSIBLE PASSING SPACE DESIGN
6-14

Approved By R. A. SHUBERT	Checked By H. M. E.
Date JUNE 03, 2008	Drawn By QEC / J. R.

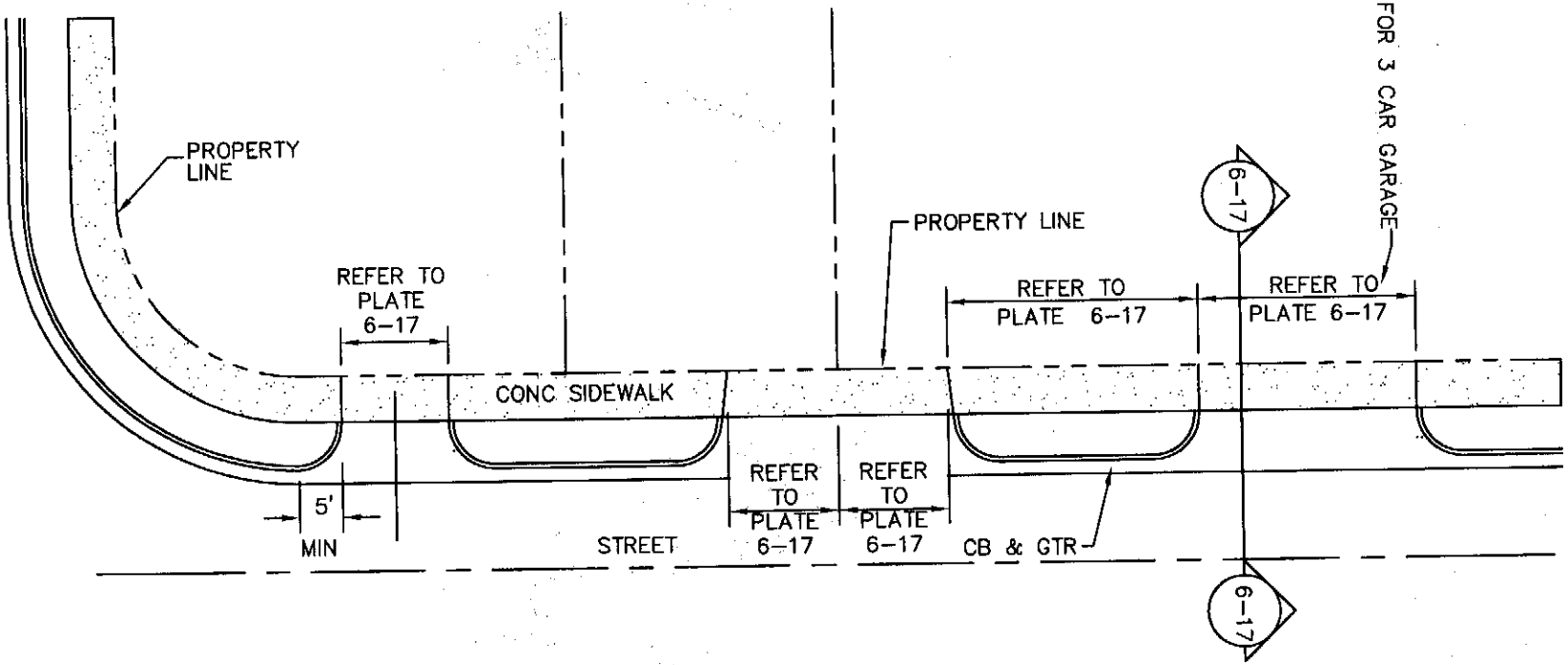

RESIDENTIAL DRIVEWAY

NTS

NOTE:
A MINIMUM PARKING SPACE LENGTH OF TWENTY (20) FEET SHALL BE PROVIDED MEASURED FROM THE PROPERTY LINE TO A GARAGE, CARPORT OR PARKING SPACE.

TITLE 19 - SUBDIVISION ORDINANCE

ENGINEERING DEPARTMENT

DESIGN STANDARDS FOR CONSTRUCTION

RESIDENTIAL DRIVEWAYS
6-15

Approved By R. A. SHUBERT
Date JUNE 03, 2008

Checked By H. M. E.
Drawn By QEC / J. R.

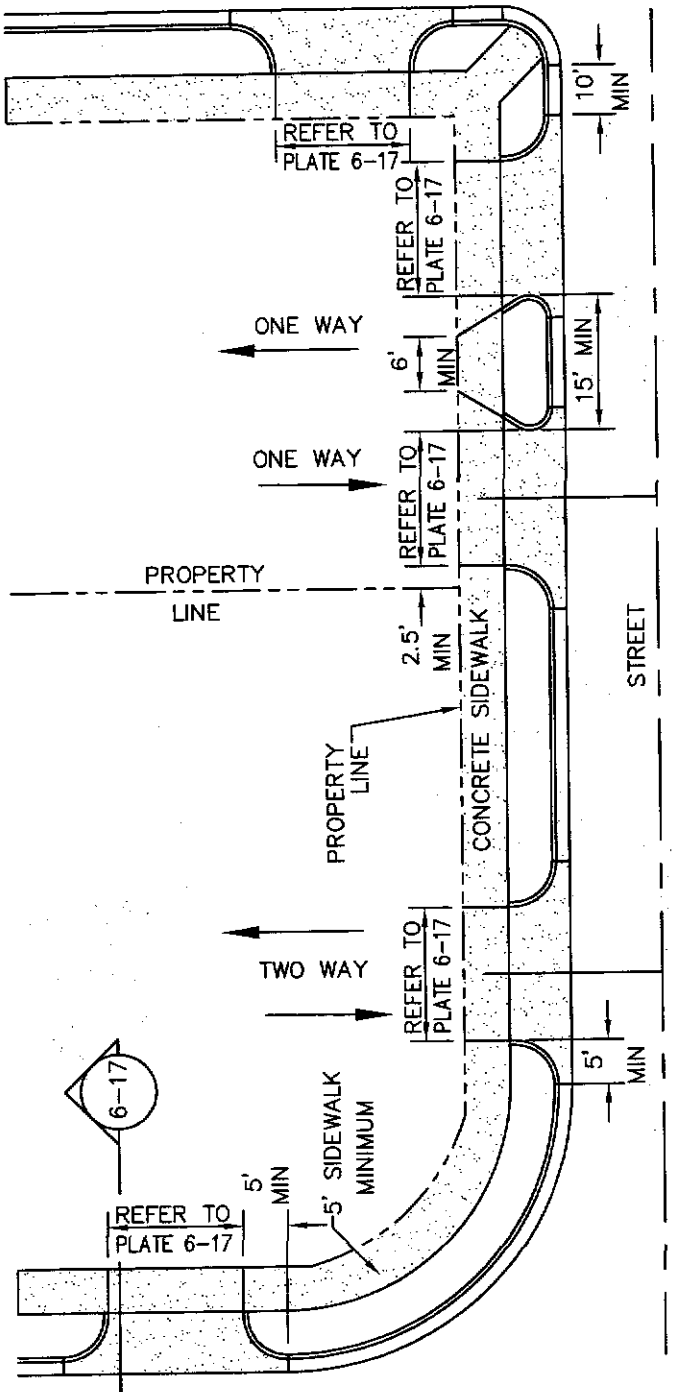

THE CITY ENGINEER MAY GRANT VARIANCES TO THE DRIVEWAY REQUIREMENTS PURSUANT TO SECTION 13.12.210 OF THE EL PASO MUNICIPAL CODE

COMMERCIAL/INDUSTRIAL DRIVEWAYS

NTS

TITLE 19 - SUBDIVISION ORDINANCE

ENGINEERING DEPARTMENT

DESIGN STANDARDS FOR CONSTRUCTION

COMMERCIAL / INDUSTRIAL DRIVEWAYS

6-15A

Approved By R. A. SHUBERT	Checked By H. M. E.
Date JUNE 03, 2008	Drawn By QEC / J. R.

Type I and Type II Two-Way Driveway Standards

Driveway	Type of Development	Curb				Minimum Edge to Edge Spacing Between Drives (ft.)
		Width (ft.)		Radius (ft.)		
		Min.	Max.	Min.	Max.	
Type I	Single-Family-60' lots	10	20	5	5	10
	Less than 60' lots, Duplex and Townhouse	15	25	10	10	20
	Multi-Resident Apartments	25	30*	10	10	20
Type II	Office, Commercial and Parking Lots	25	35	10	15	20
	Industrial	24	45	10	15	20
	Banks, Service Stations, and Convenience Stores with Gasoline Pumps	25	35**	10	15	1/3 x Frontage

* On 50 MPH streets

** Special approval required by City Engineer, or designee depending on location, traffic count, speed and angle of driveway

(TO BE MODIFIED BY THE CITY OF EL PASO TRAFFIC AND TRANSPORTATION DEPARTMENT)

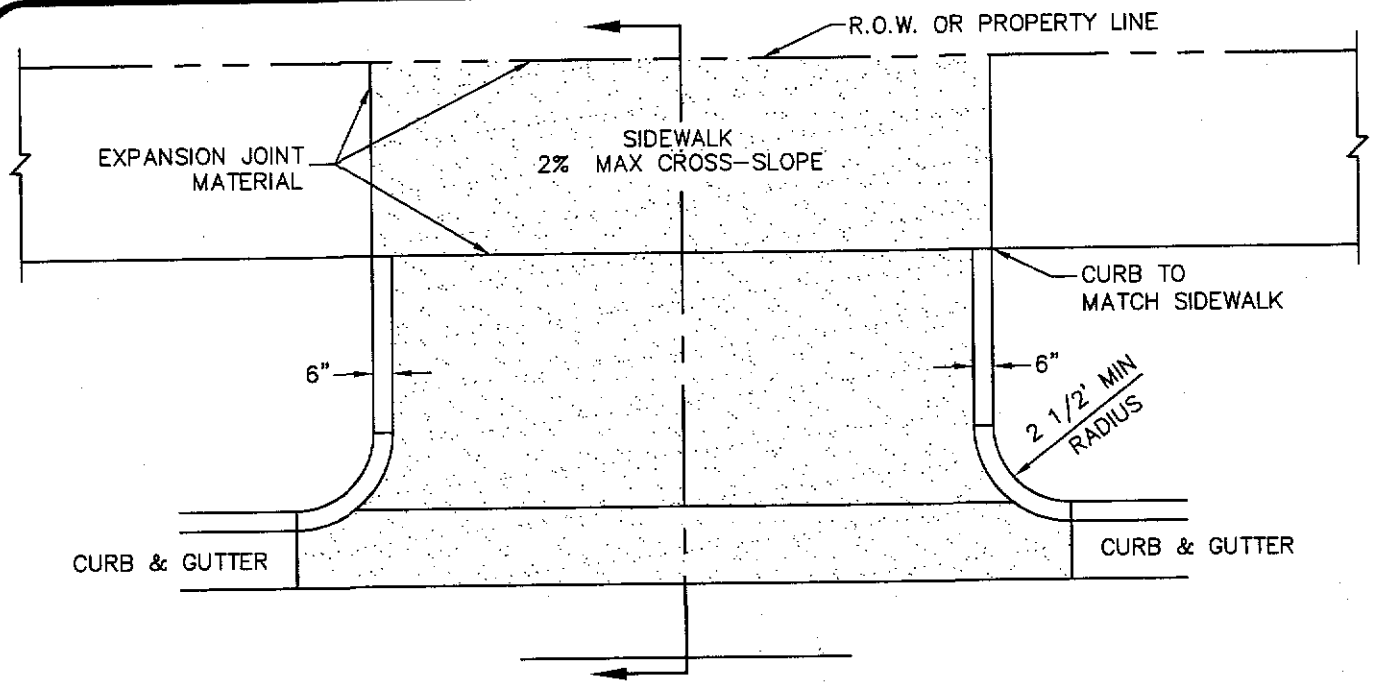

DRIVEWAY PLAN

NTS

DRIVEWAY WIDTH	MIN	MAX
COMMERCIAL/INDUSTRIAL	24'	35'
RESIDENTIAL (SINGLE FAMILY 60' LOTS)	10'	20'
LESS THAN 60' LOTS, DUPLEX, AND TOWNHOMES (REFER TO PLATE 6-16)	15'	25'

RESIDENTIAL

6" CONC WITHOUT W.W.F.
4" CONC WITH 6X6-10/10

COMMERCIAL/INDUSTRIAL

6" CONC WITH 6X6-6/6

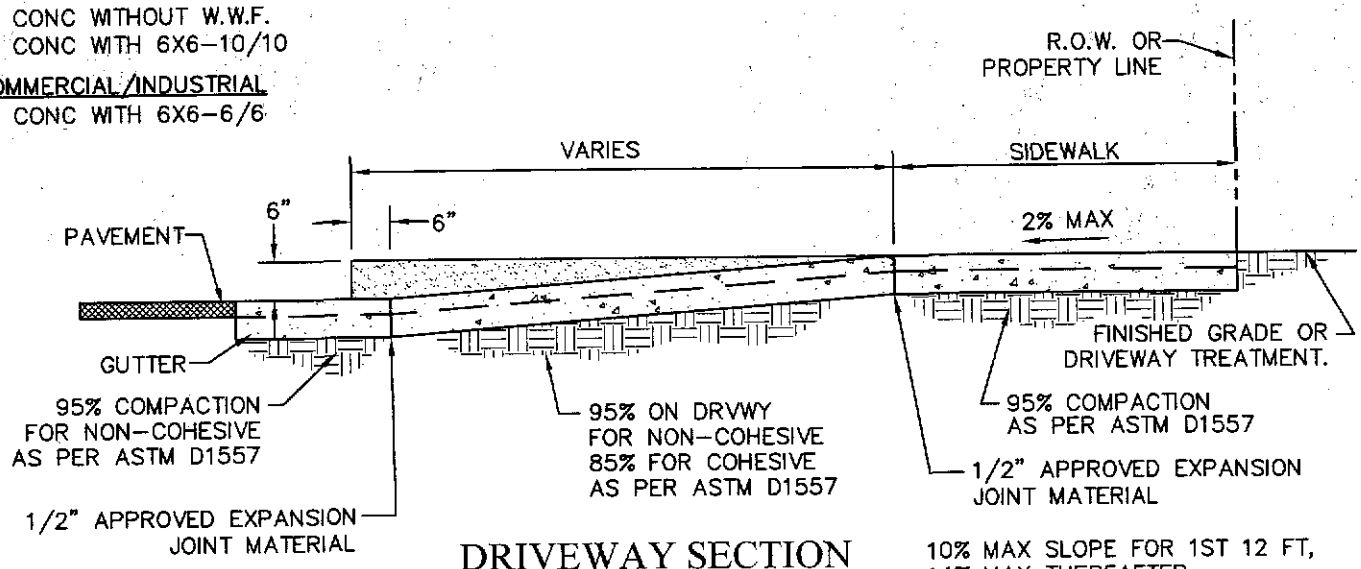

DRIVEWAY SECTION

NTS

10% MAX SLOPE FOR 1ST 12 FT,
14% MAX THEREAFTER

TITLE 19 - SUBDIVISION ORDINANCE

ENGINEERING DEPARTMENT

DESIGN STANDARDS FOR CONSTRUCTION

CONCRETE APRON FOR DRIVEWAYS/ALLEYWAYS
6-17

Approved By R. A. SHUBERT	Checked By H. M. E.
Date JUNE 03, 2008	Drawn By QEC / J. R.

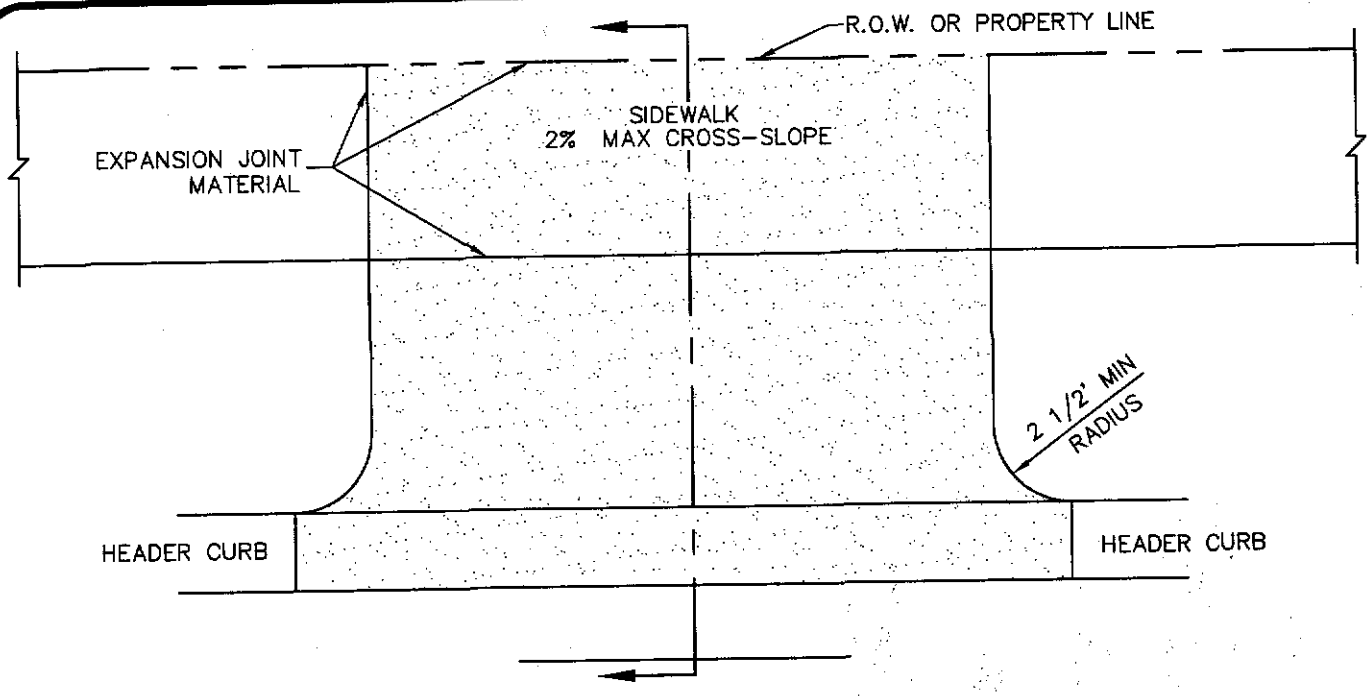

DRIVEWAY PLAN

NTS

DRIVEWAY WIDTH	MIN	MAX
COMMERCIAL/INDUSTRIAL	24'	35'
RESIDENTIAL (SINGLE FAMILY 60' LOTS)	10'	20'
LESS THAN 60' LOTS, DUPLEX, AND TOWNHOMES (REFER TO PLATE 6-16)	15'	25'

RESIDENTIAL
6" CONC WITHOUT W.W.F.
4" CONC WITH 6X6-10/10

COMMERCIAL/INDUSTRIAL
6" CONC WITH 6X6-6/6

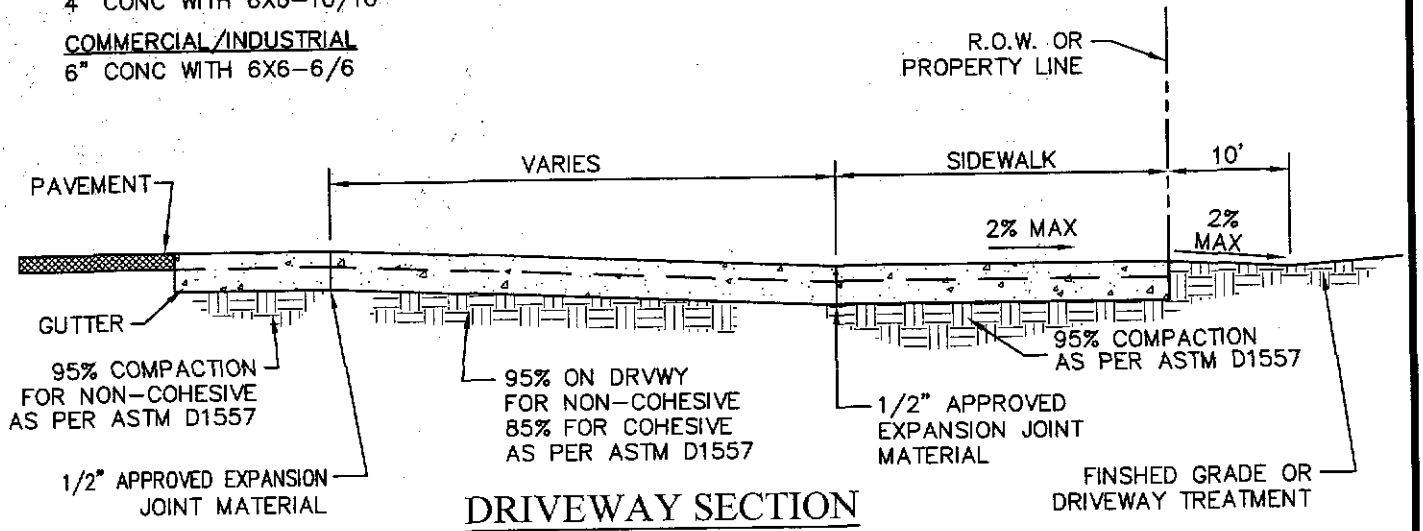

DRIVEWAY SECTION

NTS

TITLE 19 - SUBDIVISION ORDINANCE

ENGINEERING DEPARTMENT

DESIGN STANDARDS FOR CONSTRUCTION

DRIVEWAY WITH ON-SITE PONDING
6-18

Approved By R. A. SHUBERT	Checked By H. M. E.
Date JUNE 03, 2008	Drawn By QEC / J. R.

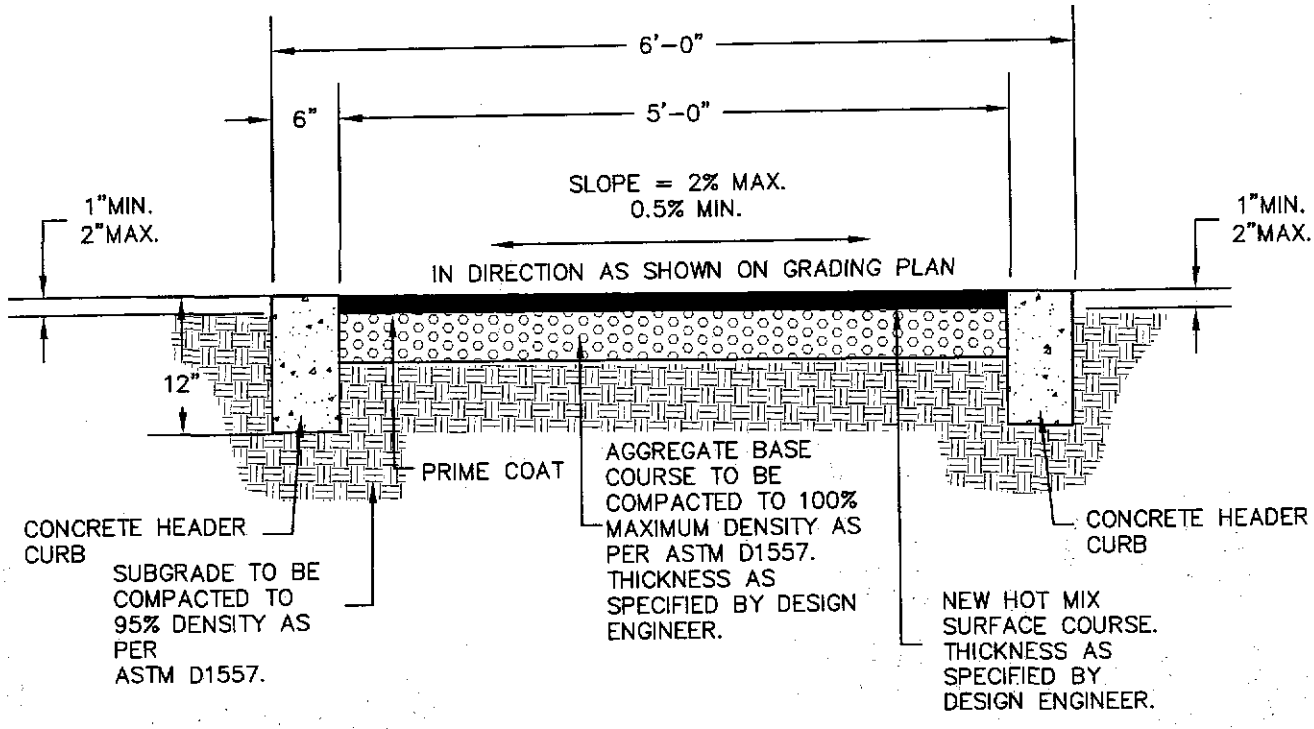

NOTES:

1. CONCRETE HEADER CURBS SHALL BE 3,000 P.S.I. MIN.
2. DUMMY JOINT REQUIRED AT 10' O.C.
3. 1/2" PREMOLDED BITUMINOUS EXPANSION JOINT (AASHTO M-33) IS REQUIRED FOR ALL CURB RETURNS.
4. SUBGRADE UNDER CURB MUST BE FORMED AND COMPACTED TO 95% ASTM D1557.
5. EXPANSION JOINTS REQUIRED AT 50' O.C. WHEN FORMING FOR CURBS.
6. REFER TO GRADING & DRAINAGE PLAN FOR DIRECTION OF FLOW.

ASPHALTIC WALKWAY/JOGGING PATH

SCALE: N.T.S.

TITLE 19 - SUBDIVISION ORDINANCE

ENGINEERING DEPARTMENT

DESIGN STANDARDS FOR CONSTRUCTION

ASPHALTIC WALKWAY/JOGGING PATH
6-19

Approved By R. A. SHUBERT	Checked By H. M. E.
Date JUNE 03, 2008	Drawn By QEC / J. R.

ALL ACCESSIBLE ROUTES SHALL NOT EXCEED A RUNNING SLOPE GREATER THAN 1:20. NO WHERE SHALL THE CROSS SLOPE OF AN ACCESSIBLE ROUTE EXCEED 1:50. MAXIMUM SLOPES OF ADJOINING GUTTERS, ROAD SURFACE IMMEDIATELY ADJACENT TO THE CURB RAMP, OR ACCESSIBLE ROUTE SHALL NOT EXCEED 1:20. PARKING SPACES AND ACCESS AISLES SHALL BE LEVEL WITH SURFACE SLOPES NOT EXCEEDING 1:50 IN ALL DIRECTIONS. NEW WHEELCHAIR RAMPS SHALL NOT EXCEED A SLOPE OF 1:12.

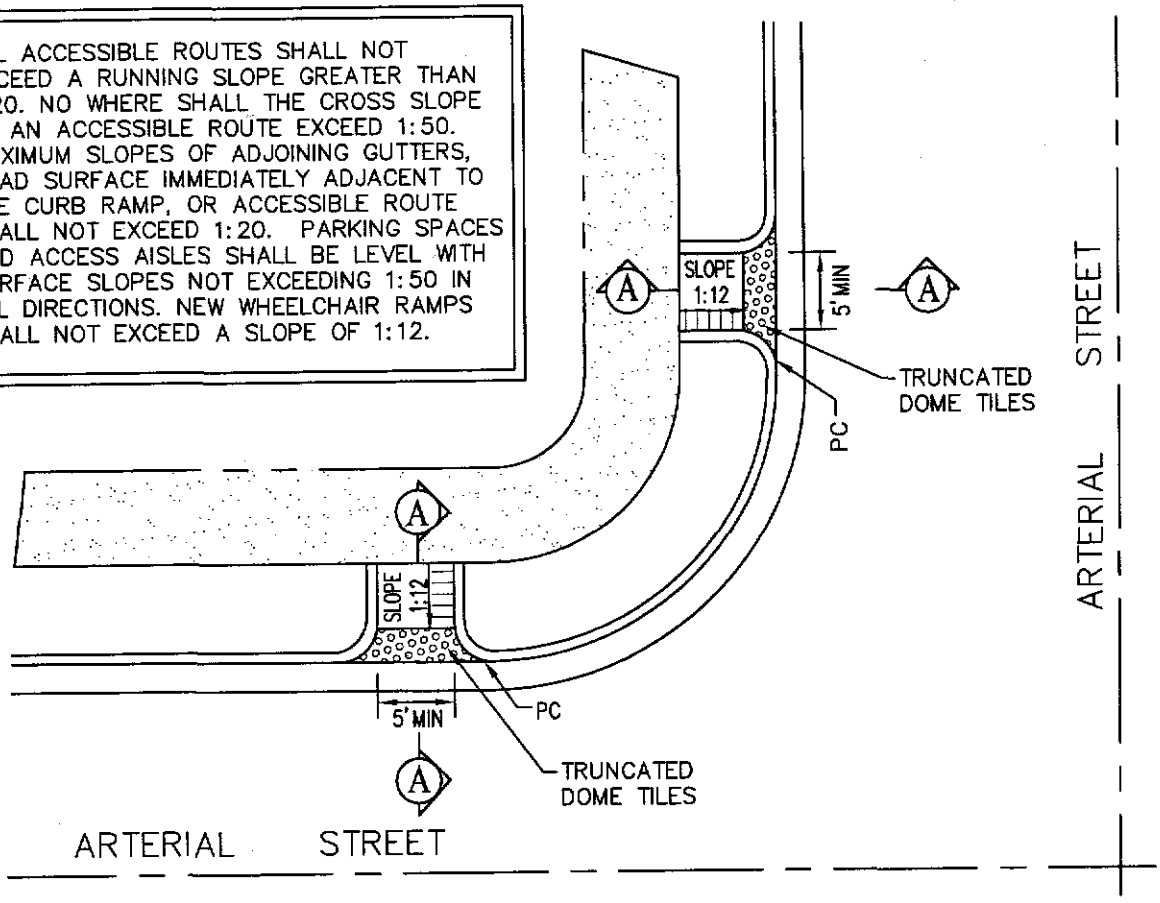

STRAIGHT CURB RAMP DESIGN WITH CURB RETURNS

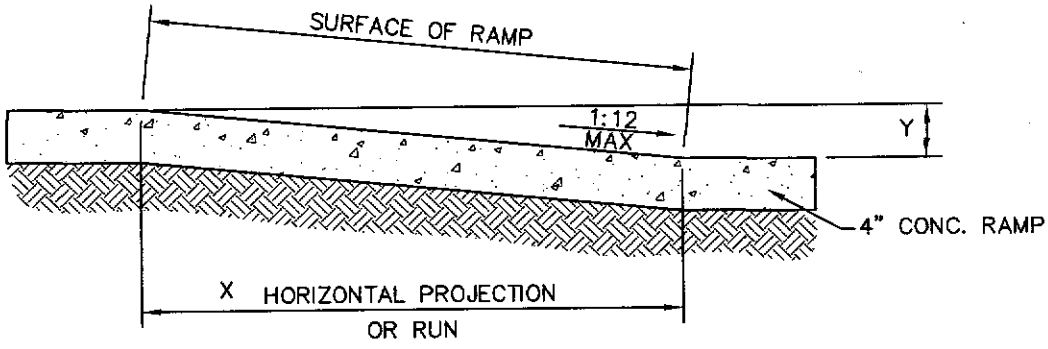

SECTION A

NOTES:
(1) SLOPE = y:x, where x is level plane
(2) Cross-slope shall not exceed 1:50

TITLE 19 - SUBDIVISION ORDINANCE

ENGINEERING DEPARTMENT

DESIGN STANDARDS FOR CONSTRUCTION

STRAIGHT CURB RAMP DESIGN W/ CURB RETURNS 6-20

Approved By R. A. SHUBERT	Checked By H. M. E.
Date JUNE 03, 2008	Drawn By QEC / J. R.

ALL ACCESSIBLE ROUTES SHALL NOT EXCEED A RUNNING SLOPE GREATER THAN 1:20. NO WHERE SHALL THE CROSS SLOPE OF AN ACCESSIBLE ROUTE EXCEED 1:50. MAXIMUM SLOPES OF ADJOINING GUTTERS, ROAD SURFACE IMMEDIATELY ADJACENT TO THE CURB RAMP, OR ACCESSIBLE ROUTE SHALL NOT EXCEED 1:20. PARKING SPACES AND ACCESS AISLES SHALL BE LEVEL WITH SURFACE SLOPES NOT EXCEEDING 1:50 IN ALL DIRECTIONS. NEW WHEELCHAIR RAMPS SHALL NOT EXCEED A SLOPE OF 1:12.

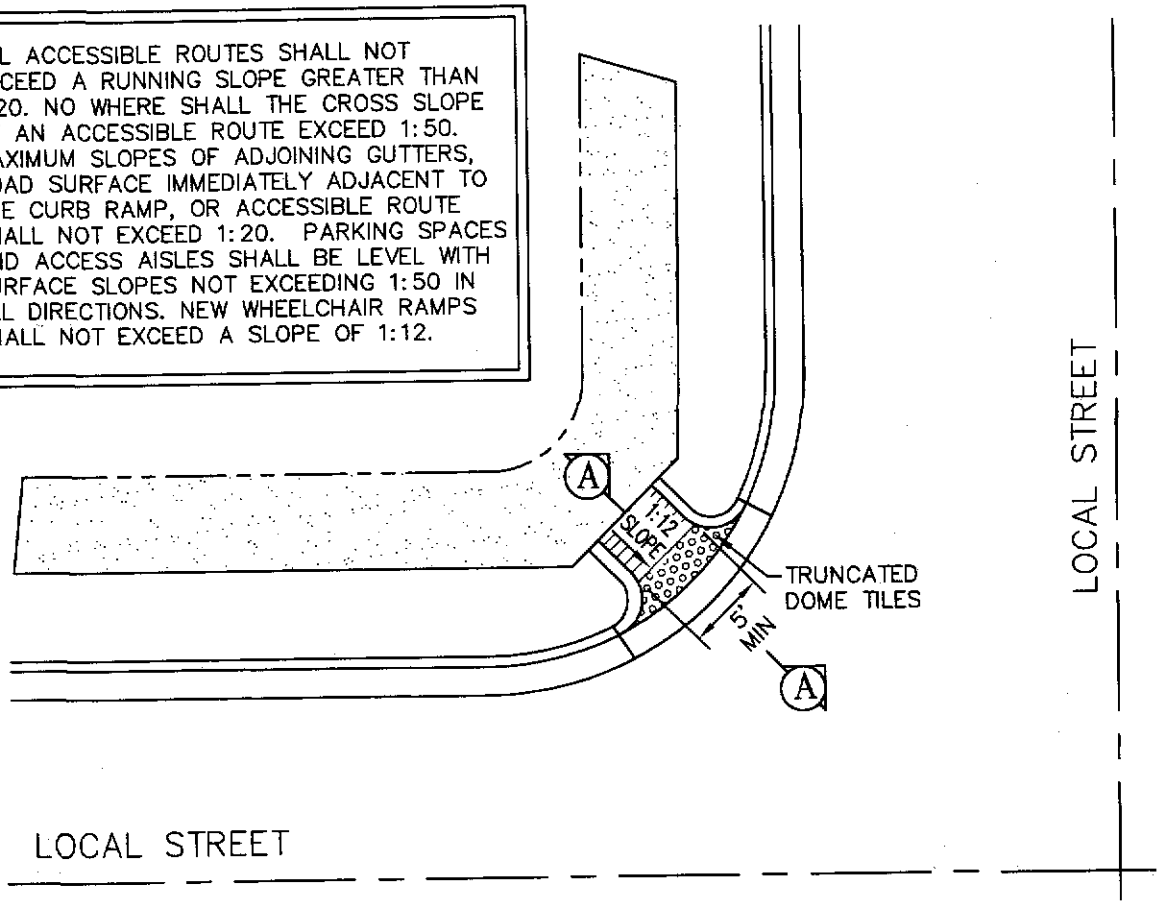

DIAGONAL CURB RAMP DESIGN WITH CURB RETURNS

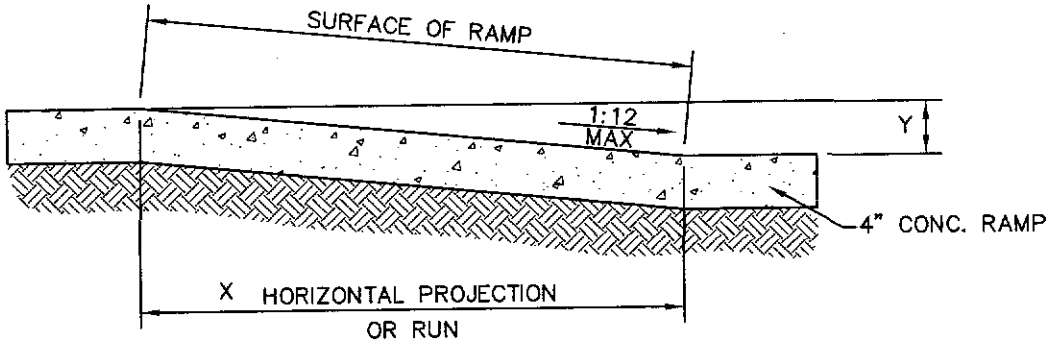

SECTION A

NOTES:

(1) SLOPE = y:x, where x is level plane

(2) Cross-slope shall not exceed 1:50

TITLE 19 - SUBDIVISION ORDINANCE

ENGINEERING DEPARTMENT

DESIGN STANDARDS FOR CONSTRUCTION

DIAGONAL CURB RAMP DESIGN W/ CURB RETURNS 6-21

Approved By R. A. SHUBERT	Checked By H. M. E.
Date JUNE 03, 2008	Drawn By OEC / J. R.

ALL ACCESSIBLE ROUTES SHALL NOT EXCEED A RUNNING SLOPE GREATER THAN 1:20. NO WHERE SHALL THE CROSS SLOPE OF AN ACCESSIBLE ROUTE EXCEED 1:50. MAXIMUM SLOPES OF ADJOINING GUTTERS, ROAD SURFACE IMMEDIATELY ADJACENT TO THE CURB RAMP, OR ACCESSIBLE ROUTE SHALL NOT EXCEED 1:20. PARKING SPACES AND ACCESS AISLES SHALL BE LEVEL WITH SURFACE SLOPES NOT EXCEEDING 1:50 IN ALL DIRECTIONS. NEW WHEELCHAIR RAMPS SHALL NOT EXCEED A SLOPE OF 1:12.

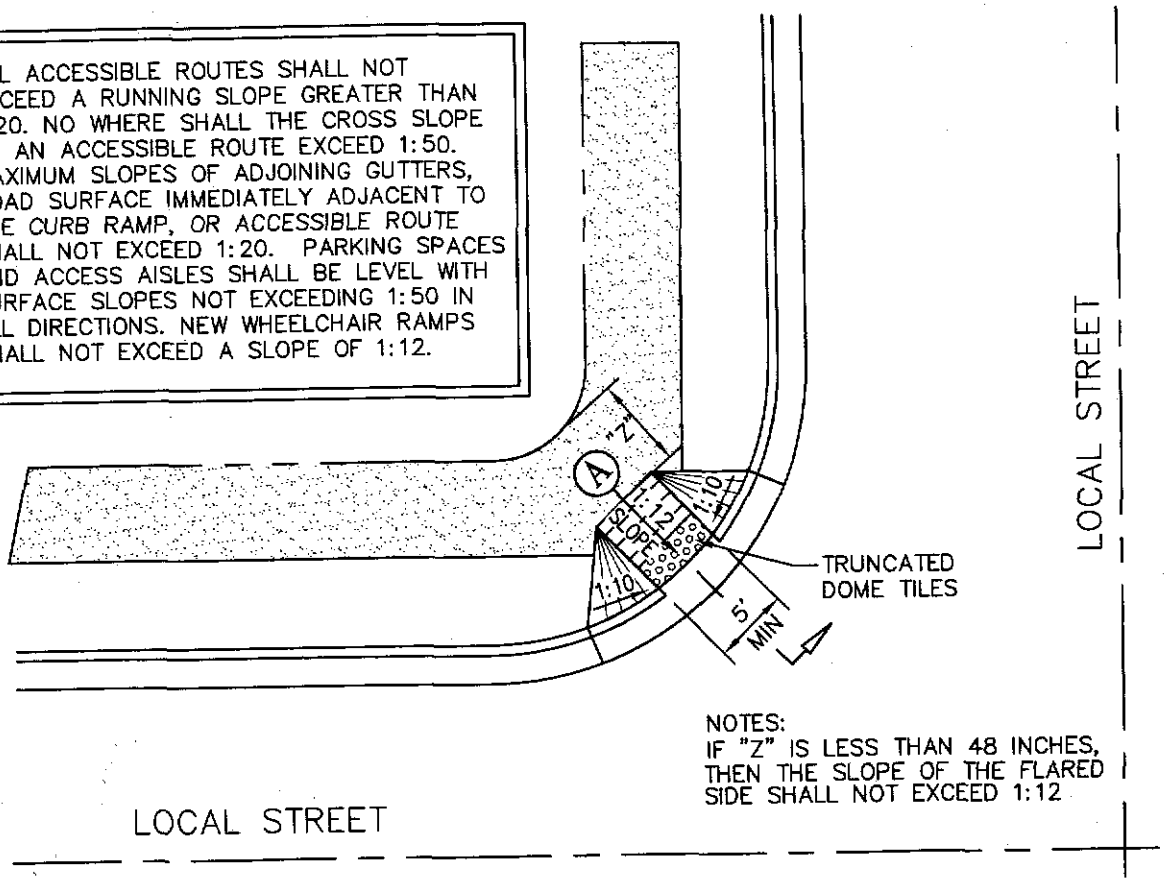

NOTES:
IF "Z" IS LESS THAN 48 INCHES, THEN THE SLOPE OF THE FLARED SIDE SHALL NOT EXCEED 1:12

DIAGONAL CURB RAMP DESIGN WITH FLARED SIDES

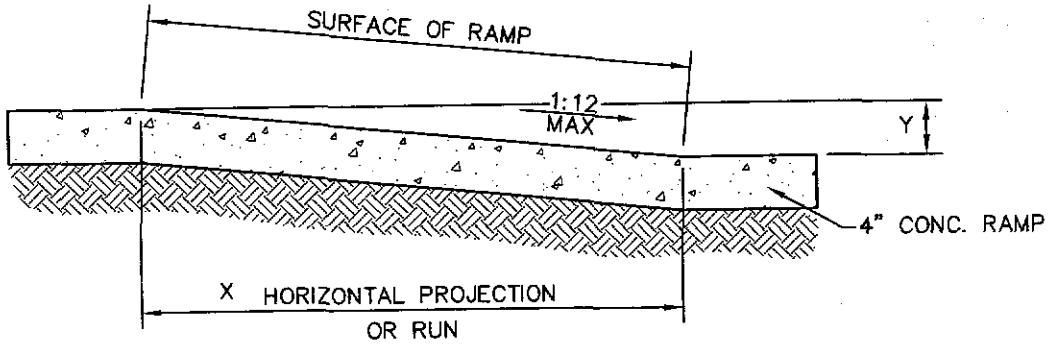

SECTION A

NOTES:

(1) SLOPE = y:x, where x is level plane

(2) Cross-slope shall not exceed 1:50

TITLE 19 - SUBDIVISION ORDINANCE

ENGINEERING DEPARTMENT

DESIGN STANDARDS FOR CONSTRUCTION

DIAGONAL CURB RAMP DESIGN W/ FLARED SIDES 6-22

Approved By R. A. SHUBERT	Checked By H. M. E.
Date JUNE 03, 2008	Drawn By QEC / J. R.

ALL ACCESSIBLE ROUTES SHALL NOT EXCEED A RUNNING SLOPE GREATER THAN 1:20. NO WHERE SHALL THE CROSS SLOPE OF AN ACCESSIBLE ROUTE EXCEED 1:50. MAXIMUM SLOPES OF ADJOINING GUTTERS, ROAD SURFACE IMMEDIATELY ADJACENT TO THE CURB RAMP, OR ACCESSIBLE ROUTE SHALL NOT EXCEED 1:20. PARKING SPACES AND ACCESS AISLES SHALL BE LEVEL WITH SURFACE SLOPES NOT EXCEEDING 1:50 IN ALL DIRECTIONS. NEW WHEELCHAIR RAMPS SHALL NOT EXCEED A SLOPE OF 1:12.

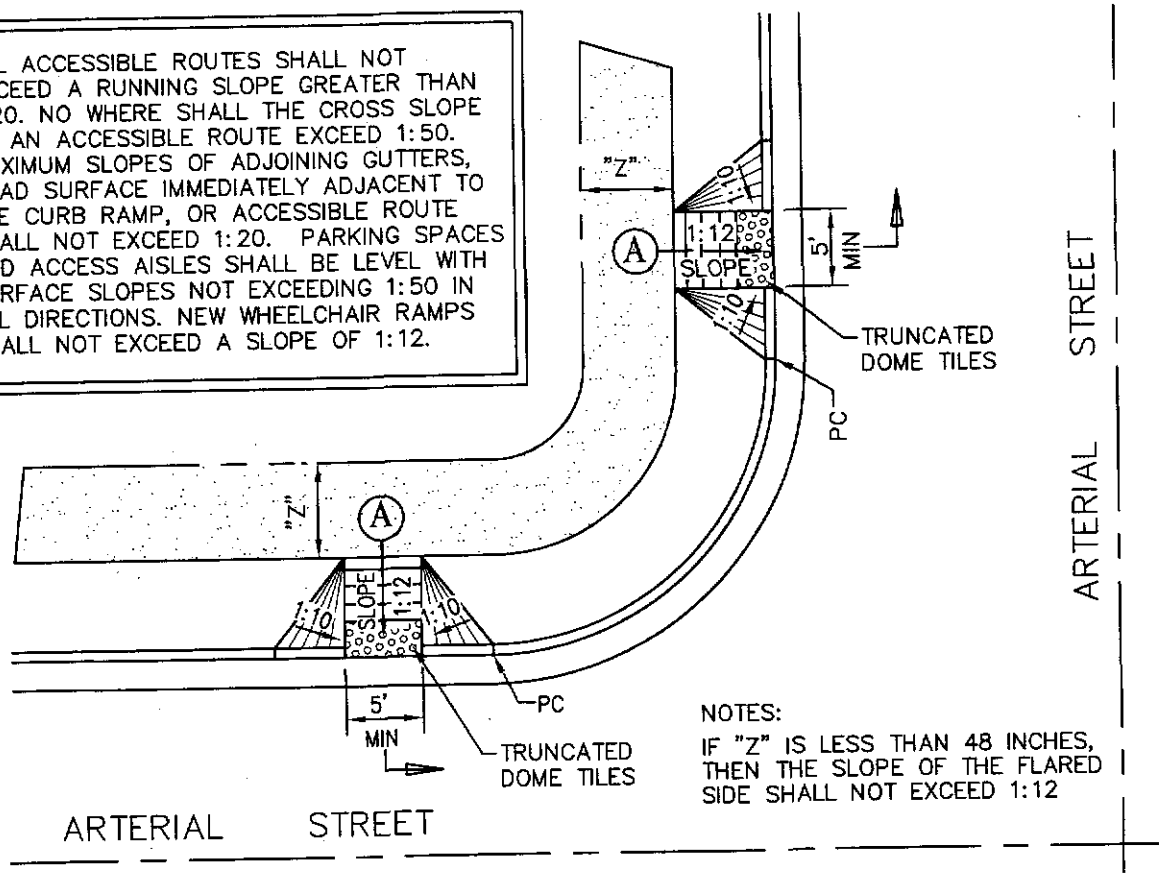

NOTES:

IF "Z" IS LESS THAN 48 INCHES, THEN THE SLOPE OF THE FLARED SIDE SHALL NOT EXCEED 1:12

STRAIGHT CURB RAMP DESIGN WITH FLARED SIDES

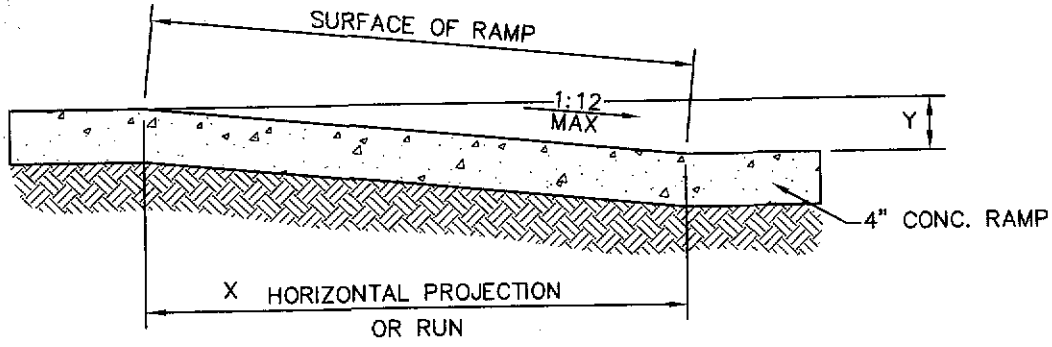

SECTION A

NOTES:

(1) SLOPE = y:x, where x is level plane

(2) Cross-slope shall not exceed 1:50

TITLE 19 - SUBDIVISION ORDINANCE

ENGINEERING DEPARTMENT

DESIGN STANDARDS FOR CONSTRUCTION

STRAIGHT CURB RAMP DESIGN W/ FLARED SIDES

6-23

Approved By R. A. SHUBERT	Checked By H. M. E.
Date JUNE 03, 2008	Drawn By QEC / J. R.

Width. The minimum width of curb ramps shall be 60 inches exclusive of flared sides. In areas where space does not permit a 60 inch width, the minimum width shall be no less than 36 inches as determined by the owner (Note; Landing can not exceed 2% slope on every direction). See Figure

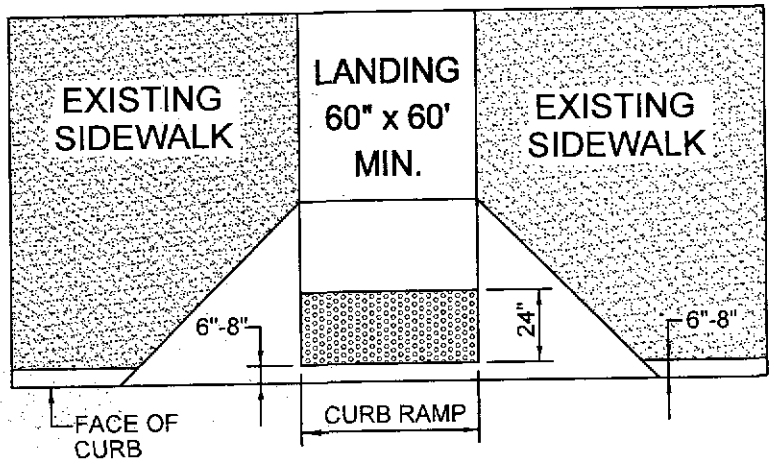

LANDING CAN NOT EXCEED 2% SLOPE ON EVERY DIRECTION

TITLE 19 - SUBDIVISION ORDINANCE

ENGINEERING DEPARTMENT

DESIGN STANDARDS FOR CONSTRUCTION

WHEEL CHAIR CURB RAMP WIDTH
6-24

Approved By R. A. SHUBERT	Checked By H. M. E.
Date JUNE 03, 2008	Drawn By QEC / J. R.

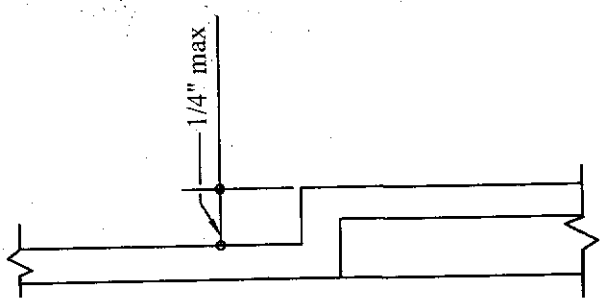

Changes in Level

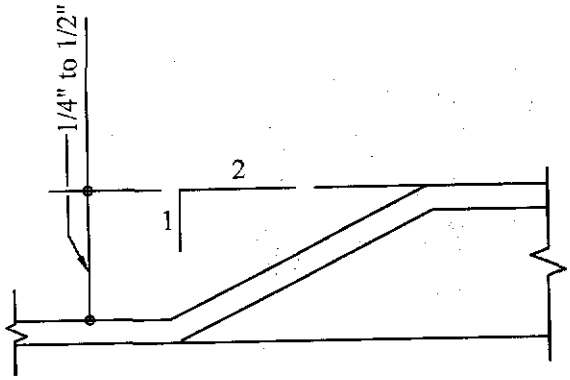

Changes in Level

TITLE 19 - SUBDIVISION ORDINANCE

ENGINEERING DEPARTMENT

DESIGN STANDARDS
FOR CONSTRUCTION

RAMP SURFACE
6-25

Approved By R. A. SHUBERT	Checked By H. M. E.
Date JUNE 03, 2008	Drawn By QEC / J. R.

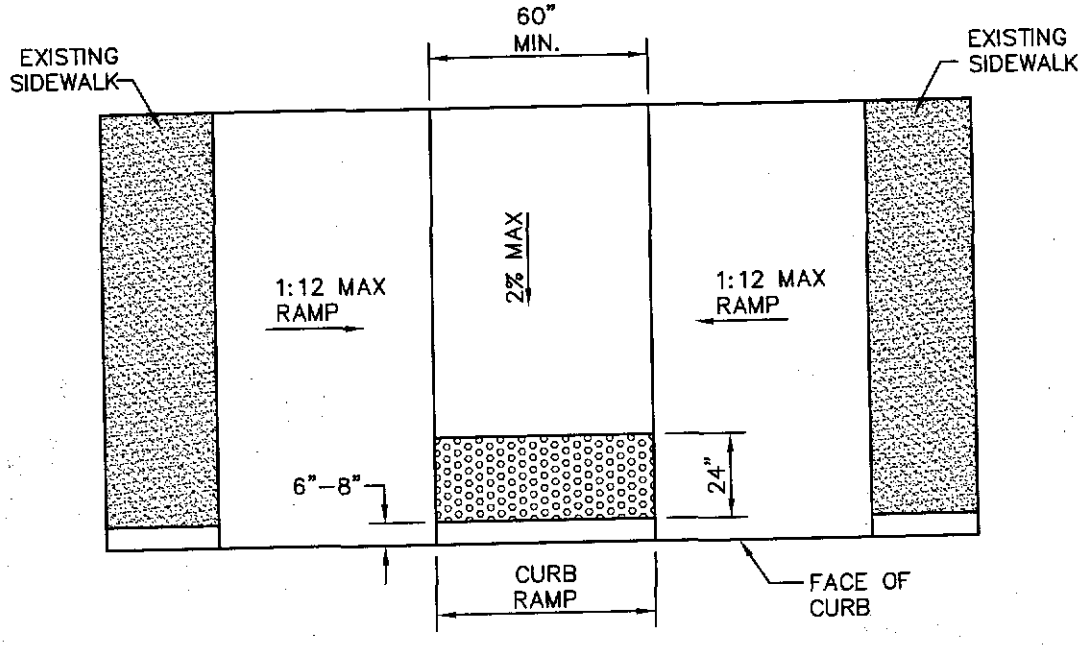

TITLE 19 - SUBDIVISION ORDINANCE

ENGINEERING DEPARTMENT

DESIGN STANDARDS
FOR CONSTRUCTION

TRANSITION RAMP
WITH DETECTABLE
WARNING
6-26

Approved By R. A. SHUBERT
Date JUNE 03, 2008

Checked By H. M. E.
Drawn By QEC / J. R.

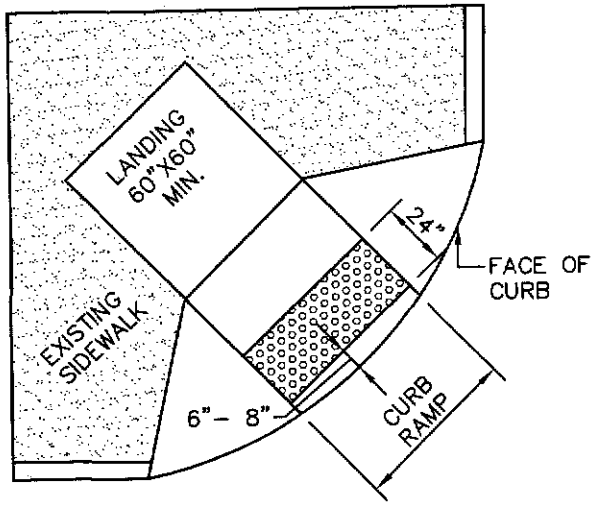

(SHARED CURB RAMP)

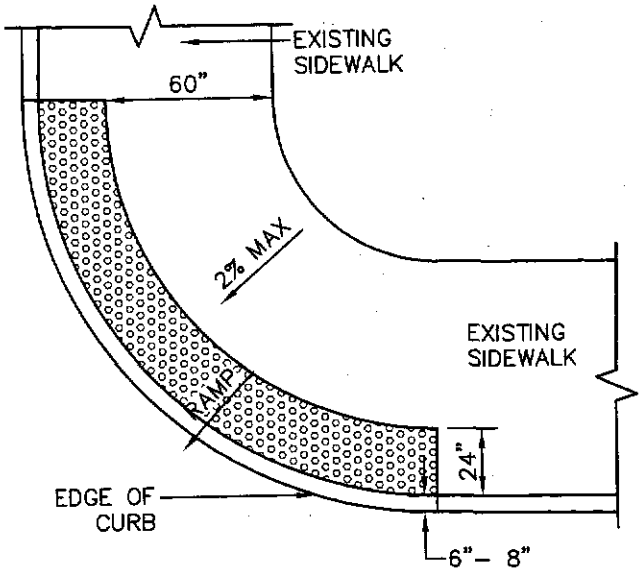

(BLENDED CURB)

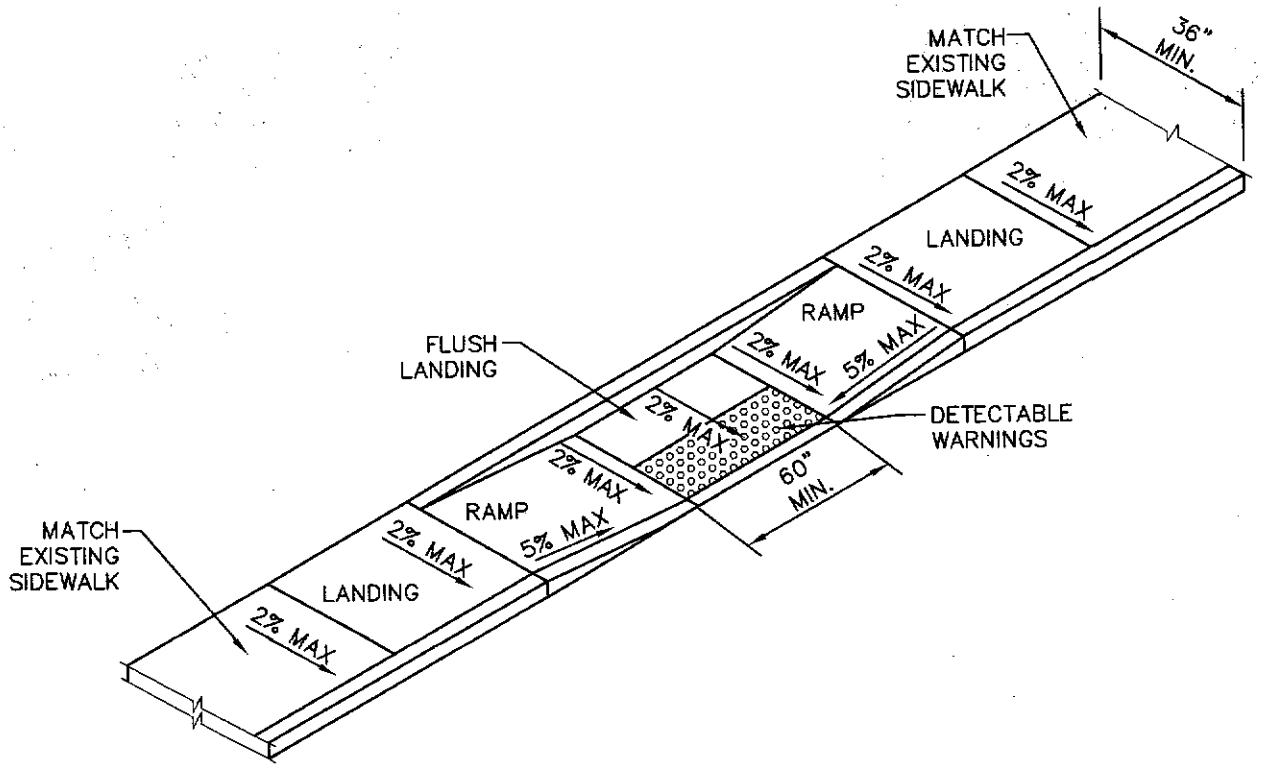

(TRANSITION RAMP: ISOMETRIC VIEW OF A TRANSITION RAMP AS CURRENTLY DEFINED. THE ILLUSTRATION IS BASED ON THE OLD "PARALLEL" STYLE RAMP)

TITLE 19 - SUBDIVISION ORDINANCE

ENGINEERING DEPARTMENT

DESIGN STANDARDS
FOR CONSTRUCTION

LOCATION OF
DETECTABLE WARNINGS
ON VARIOUS RAMPS
6-27

Approved By R. A. SHUBERT	Checked By H. M. E.
Date JUNE 03, 2008	Drawn By QEC / J. R.

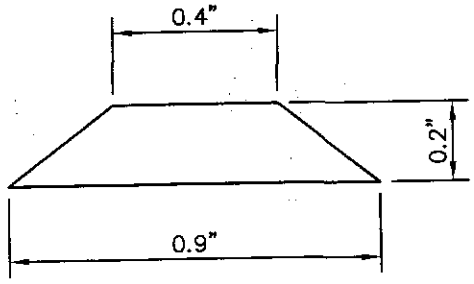

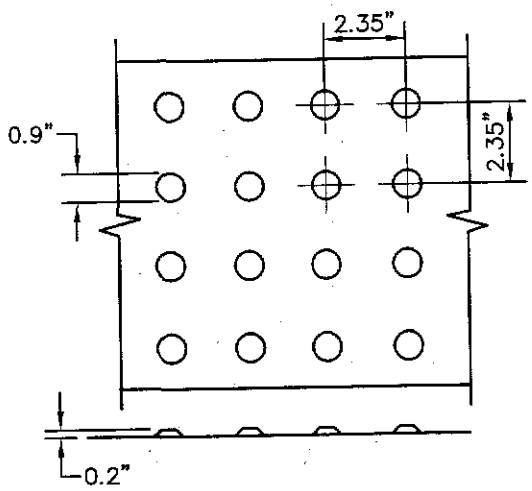

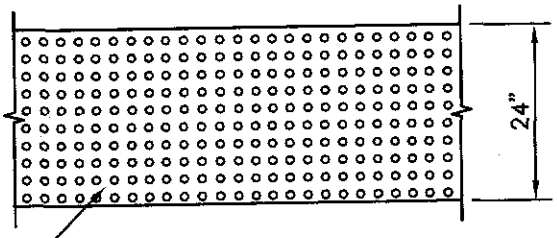

TRUNCATED DOME TILES. ADA CERTIFIED "ARMOR –TILE" TACTILE SYSTEMS OR APPROVED EQUAL

DOME SIZE AND SPACING. TRUNCATED DOMES SHALL HAVE A DIAMETER OF NOMINAL 0.9 INCHES (23 mm) AT THE BOTTOM, A DIAMETER OF 0.4 INCH (10 mm) AT THE TOP, A HEIGHT OF NOMINAL 0.2 INCHES (5 mm), AND A CENTER–TO–CENTER SPACING OF NOMINAL 2.35 INCHES (60 mm) MEASURED ALONG ONE SIDE OF A SQUARE ARRANGEMENT.

DOME ALIGNMENT. DOMES SHALL BE ALIGNED ON A SQUARE GRID IN THE PREDOMINANT DIRECTION OF TRAVEL TO PERMIT WHEELS TO ROLL BETWEEN DOMES. DETECTABLE WARNING SURFACES SHALL EXTEND 24 INCHES (610 mm) MINIMUM IN THE DIRECTION OF TRAVEL AND THE FULL WIDTH OF THE CURB RAMP, LANDING, OR BLENDED TRANSITION.

CONTRAST. THERE SHALL BE A MINIMUM OF 70 PERCENT CONTRAST IN LIGHT REFLECTANCE BETWEEN THE DETECTABLE WARNING AND AN ADJOINING SURFACE, OR THE DETECTABLE WARNING SHALL BE "RED BRICK" COLOR, UNLESS OTHERWISE DIRECTED BY THE OWNER. THE MATERIAL USED TO PROVIDE VISUAL CONTRAST SHALL BE AN INTEGRAL PART OF THE DETECTABLE WARNING SURFACE. CONTRAST SHALL BE PROVIDED BY PLACING AND MIXING TINT IN THE PLASTIC CONCRETE USED FOR THE DETECTABLE WARNING SURFACE. NO PAINTING OF SURFACE SHALL BE PERMITTED.

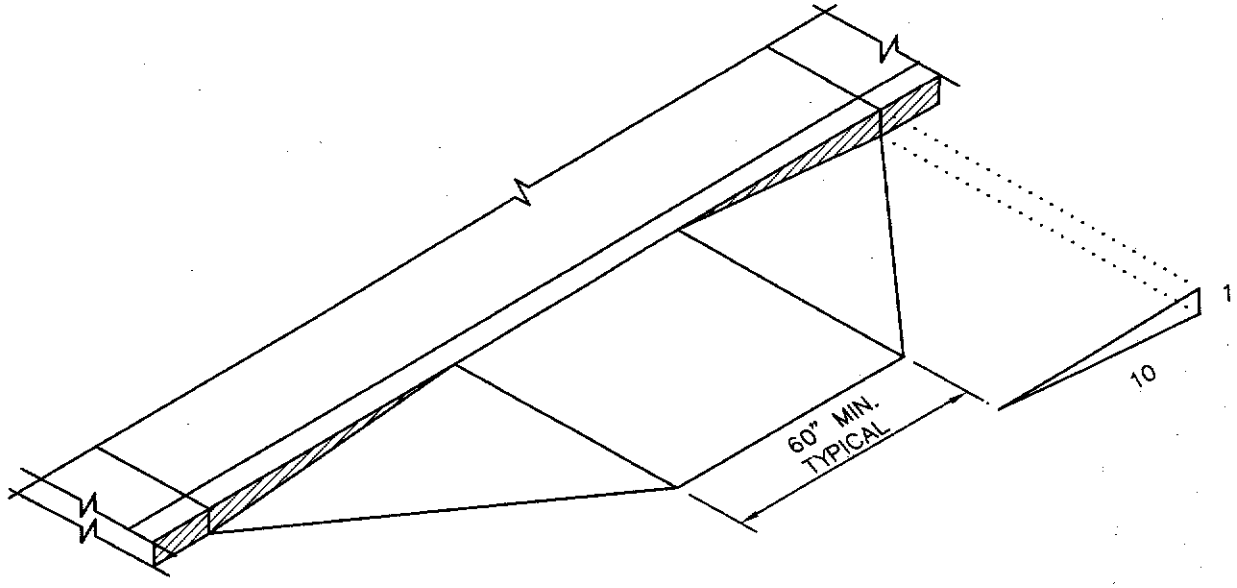

SIDES OF CURB RAMPS.
IF A CURB RAMP IS LOCATED WHERE PEDESTRIANS MUST TRAVEL ACROSS THE RAMP, OR WHERE IT IS NOT PROTECTED BY HANDRAILS OR GUARDRAILS, IT SHALL HAVE FLARED SIDES; THE MAXIMUM SLOPE OF THE FLARE SHALL BE 1:12. CURB RAMPS WITH RETURNED CURBS MAY BE USED WHERE PEDESTRIANS WOULD NOT NORMALLY WALK ACROSS THE RAMP.

TITLE 19 - SUBDIVISION ORDINANCE

ENGINEERING DEPARTMENT

DESIGN STANDARDS
FOR CONSTRUCTION

BUILT-UP CURB RAMP
6-29

Approved By R. A. SHUBERT	Checked By H. M. E.
Date JUNE 03, 2008	Drawn By QEC / J. R.

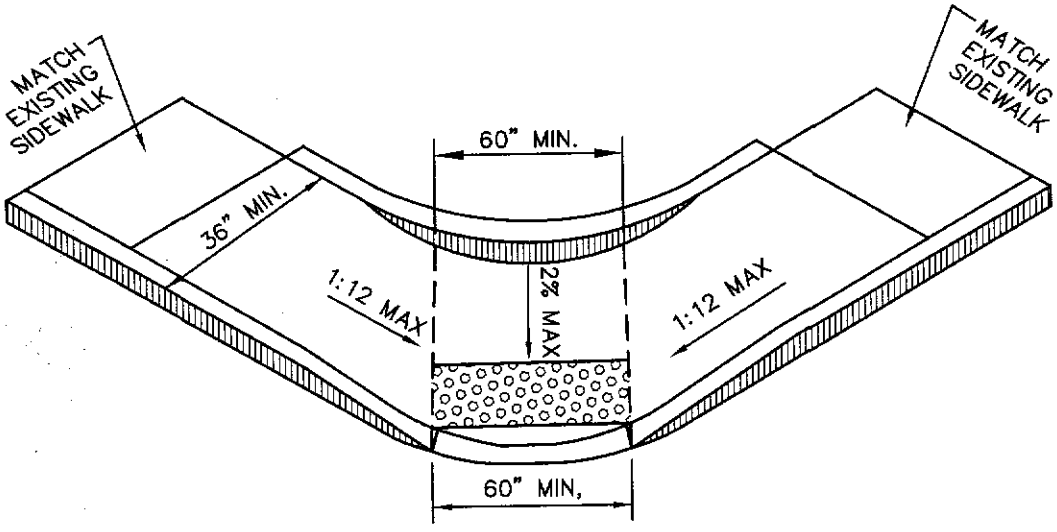

TITLE 19 - SUBDIVISION ORDINANCE

ENGINEERING DEPARTMENT

DESIGN STANDARDS FOR CONSTRUCTION

DIAGONAL SHARED RAMP
6-30

Approved By R. A. SHUBERT	Checked By H. M. E.
Date JUNE 03, 2008	Drawn By QEC / J. R.

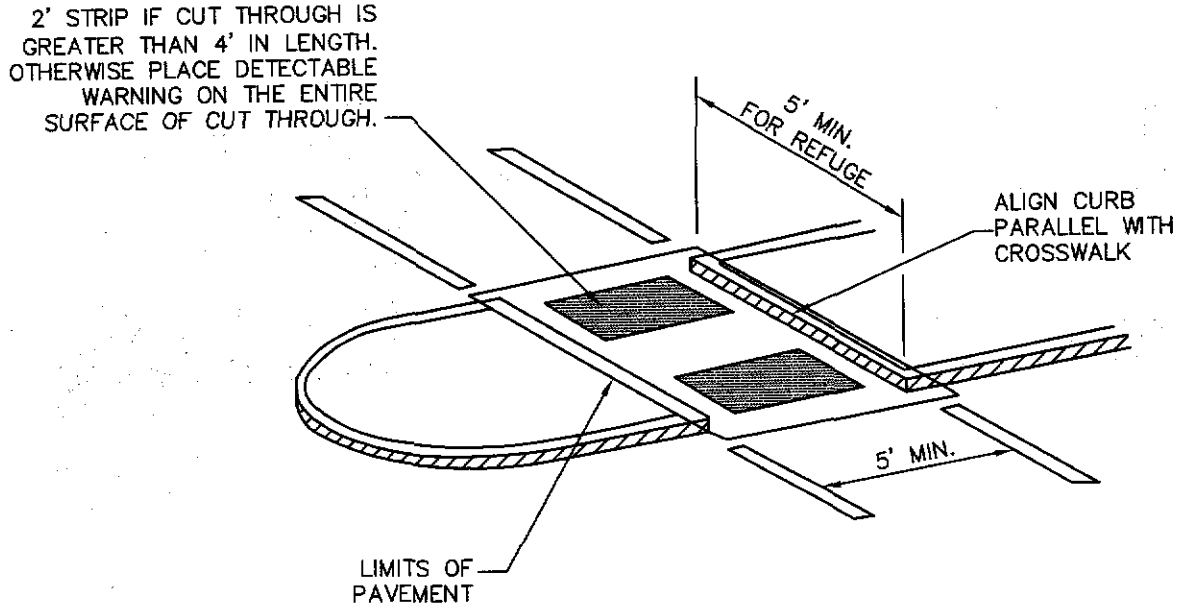

CURB RAMPS AT MEDIAN ISLANDS

TITLE 19 - SUBDIVISION ORDINANCE

ENGINEERING DEPARTMENT

DESIGN STANDARDS FOR CONSTRUCTION

CURB RAMPS AT MEDIAN ISLANDS
6-31

Approved By R. A. SHUBERT	Checked By H. M. E.
Date JUNE 03, 2008	Drawn By QEC / I. R.

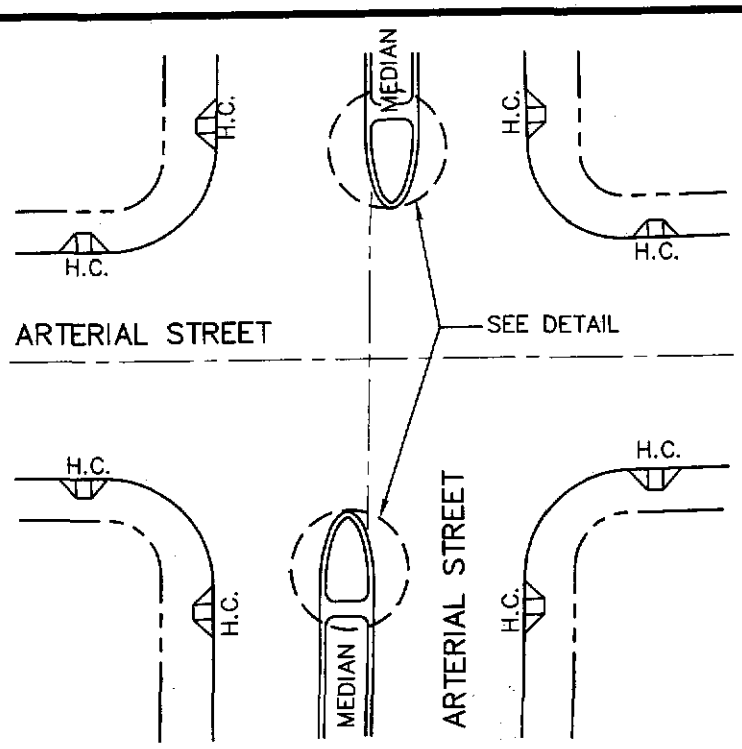

MEDIAN CURB RAMP DESIGN

ARTERIAL STREET

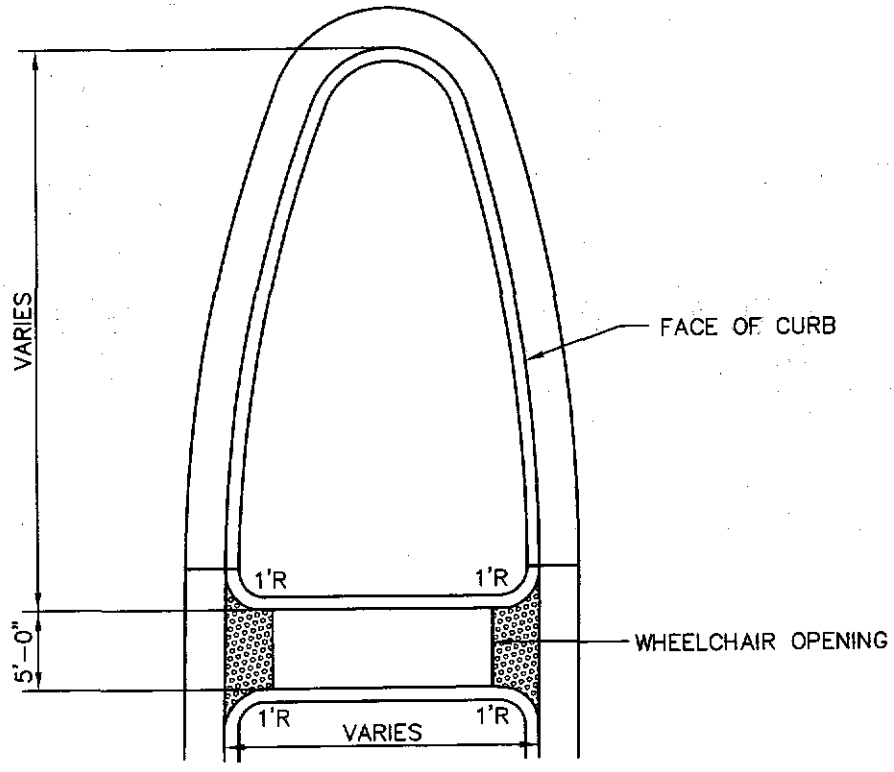

TITLE 19 - SUBDIVISION ORDINANCE

ENGINEERING DEPARTMENT

DESIGN STANDARDS FOR CONSTRUCTION

MEDIAN CURB RAMP DESIGN (ARTERIAL) 6-32

Approved By R. A. SHUBERT	Checked By H. M. E.
Date JUNE 03, 2008	Drawn By QEC / J. R.

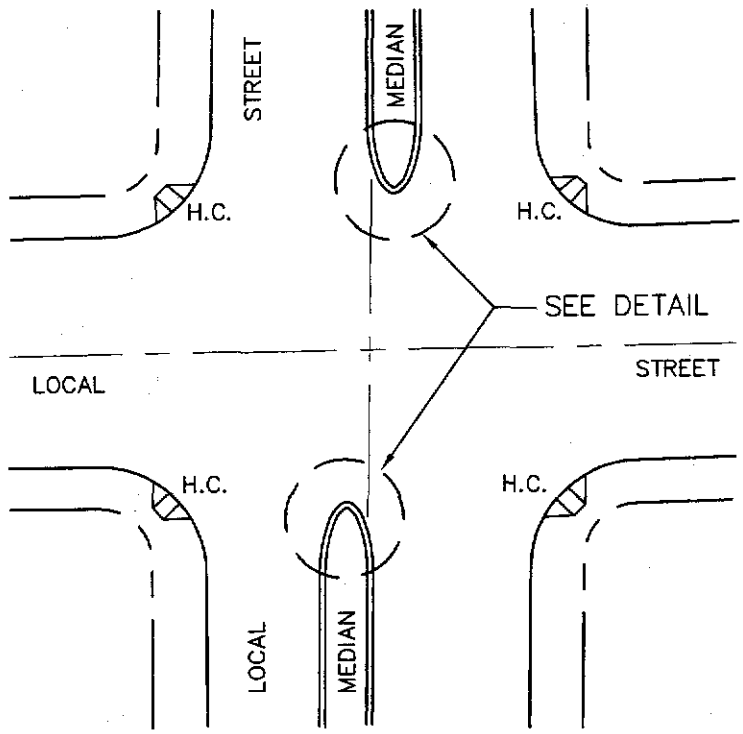

MEDIAN CURB RAMP DESIGN

LOCAL STREET

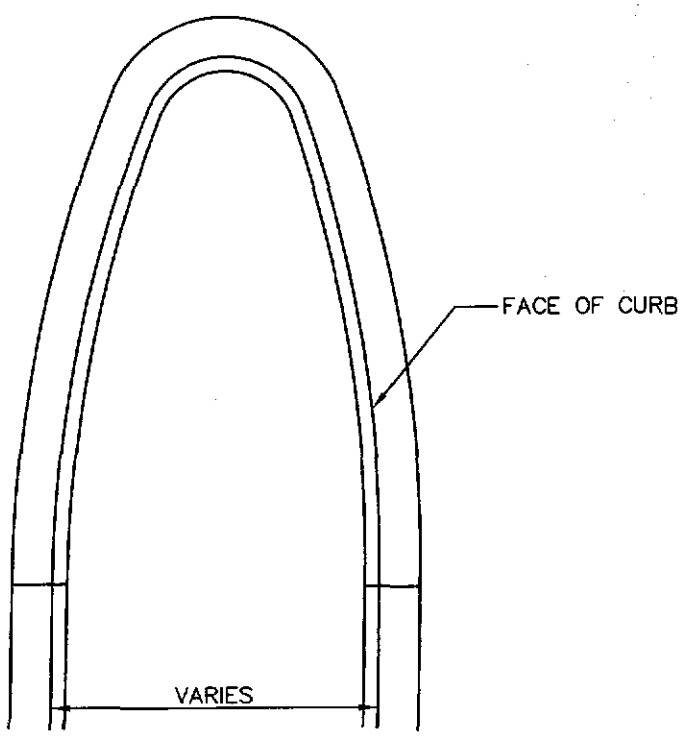

TITLE 19 - SUBDIVISION ORDINANCE

ENGINEERING DEPARTMENT

DESIGN STANDARDS FOR CONSTRUCTION

MEDIAN CURB RAMP DESIGN (LOCAL)

6-33

Approved By R. A. SHUBERT	Checked By H. M. E.
Date JUNE 03, 2008	Drawn By QEC / J. R.

SECTION 7

SECTION 7

SIGNAGE AND SIGNALIZATION

TITLE	PAGE
SPECIFICATIONS FOR ALUMINUM SIGN BLANKS	7-1 thru 7-2
9" STREET NAME SIGN EXTRUDED ALUMINUM SIGN BLANK	7-3
D.H.T. BLANK STANDARDS	7-4 thru 7-6
SPECIFICATIONS FOR REFLECTORIZED STREET NAME SIGNS	7-7 thru 7-8
9" STREET NAME SIGN	7-9
9" STREET NAME SIGN ASSEMBLY	7-10 thru 7-12
SIGN POST INSTALLATION	7-13
ALUMINUM SIGN CLAMP BRACKET FOR TRAFFIC CONTROL SIGNS	7-14
SIGN POST SPECIFICATIONS	7-15
BIKE LANE SIGNS AND MARKINGS	7-16
DEAD END SIGN	7-17A
GUARDRAIL SIGN ASSEMBLY AT DEAD END	7-17B
TYPICAL ELECTRIC RACEWAY TRENCH DETAIL	7-18
TRAFFIC SIGNAL CONDUIT LAYOUT (MAJOR-MAJOR)	7-19
TRAFFIC SIGNAL CONDUIT LAYOUT (MAJOR-MINOR)	7-20
TYPICAL TRAFFIC SIGNAL JUNCTION BOX	7-21
TYPICAL CUTS FOR CONDUIT PLACEMENT OF TRAFFIC SIGNALS	7-22
PROHIBITED PARKING SIGNAGE (FIRE LANE)	7-23
NO PARKING FIRE LANE SIGN	7-24

SPECIFICATIONS FOR ALUMINUM SIGN BLANKS

THESE SPECIFICATIONS DESCRIBE DETAILS AND MINIMUM REQUIREMENTS FOR ALUMINUM SIGN BLANKS, TO WHICH REFLECTIVE SHEETING WILL BE APPLIED.

1. ALL MATERIALS SHALL BE NEW AND UNWEATHERED AND SHALL BE OF DOMESTIC ORIGIN, MILLED, ROLLED, AND FINISHED IN DOMESTIC MILLS.

2. SIGN BLANKS SHALL BE 0.080 GAUGE ALODIZED-TREATED ALUMINUM, 5052-H38 ALLOY, FREE OF BURRS, CORROSION, WHITE RUST, AND DIRT, SUITABLE FOR APPLICATION OF REFLECTIVE SHEETING WITHOUT FURTHER PREPERATION.

3. EDGES OF BLANKS SHALL BE CUT TRUE AND SQUARE. CORNER RADII, HOLE DIAMETERS AND HOLE LOCATIONS SHALL BE AS DESCRIBED IN THE ALUMINUM SIGN BLANK BID D.H.T. STANDARDS.

4. ALL SIGN BLANKS WILL BE TREATED AS FOLLOWS:

A. DEGREASING

(1) VAPOR DEGREASING - BY TOTAL IMMERSION OF THE SIGN BLANK IN A SATURATED VAPOR OF TRICHLORETHYLENE OR PERCHLOROETHYLENE . TRADEMARK PRINTING SHALL BE REMOVED WITH LACQUER THINNER BEFORE DEGREASING.

OR

(2) ALKALINE DEGREASING - BY TOTAL IMMERSION OF THE SIGN BLANK IN A TANK CONTAINING ALKALINE SOLUTIONS, CONTROLLED AND TITRATED TO THE SOLUTION MANUFACTURER'S SPECIFICATIONS FOR TIME, TEMPERATURE, AND CONCENTRATION. IMMERSION TIME SHALL DEPEND UPON THE AMOUNT OF SOIL PRESENT, GAUGE OF THE METAL AND SOLUTION STRENGTH. RINSE THOROUGHLY WITH RUNNING WATER.

B. ETCHING

(1) ACID ETCH - ETCH WELL IN 6-8% PHOSPHORIC ACID SOLUTION AT 100 DEGREES FAHRENHEIT OR PROPRIETARY ACID ETCHING SOLUTION. RINSE THOROUGHLY WITH RUNNING WATER .

OR

(2) ALKALINE ETCH - ETCH WELL THE PRE-CLEANED ALUMINUM SURFACE IN AN ALKALINE ETCHING MATERIAL THAT IS CONTROLLED BY TITRATION. USE TIME, TEMPERATURE, AND CONCENTRATION SPECIFIED BY THE SOLUTION MANUFACTURER . RINSE THOROUGHLY. REMOVE SMUT WITH AN ACIDIC CHROMIUM COMPOUND-TYPE SOLUTION AS SPECIFIED BY THE SOLUTION MANUFACTURER AND THEN RINSE THOROUGHLY.

C. CHROMATE CONVERSION COATING

COAT THE ALUMINUM BLANKS ACCORDING TO THE CHROMATE CONVERSION COATING MANUFACTURER'S INSTRUCTIONS. THE COATING SHALL CONFORM TO ASTM B449, CLASS 2, AND SHALL RANGE IN COLOR FROM SILVERY IRIDESCENT TO PALE YELLOW. THE COATING WEIGHT SHALL BE 10 TO 35 MG. PER SQ. FT WITH A MEDIAN OF 25 MG. PER SQ. FT. AS THE OPTIMUM COATING WEIGHT.

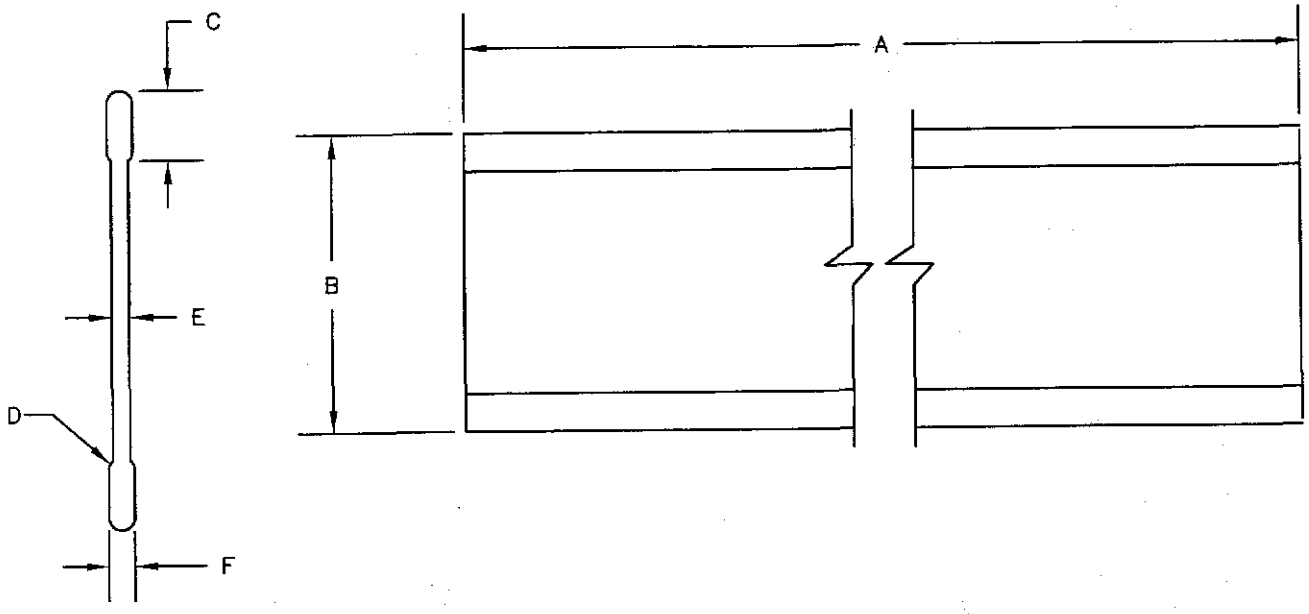

9" STREET NAME SIGN
EXTRUDED ALUMINUM SIGN BLANK

DIMENSIONS (INCHES)

A	B	C	D	E	F
30	9	0.800	1/4R	0.091	0.25
36	9	0.800	1/4R	0.091	0.25
42	9	0.800	1/4R	0.091	0.25
48	9	0.800	1/4R	0.091	0.25

TITLE 19 - SUBDIVISION ORDINANCE

ENGINEERING DEPARTMENT

DESIGN STANDARDS
FOR CONSTRUCTION

9" STREET NAME SIGN
EXTRUDED ALUMINUM
SIGN BLANK
7-3

Approved By R. A. SHUBERT
Date JUNE 03, 2008

Checked By H. M. E.
Drawn By QEC / J. R.

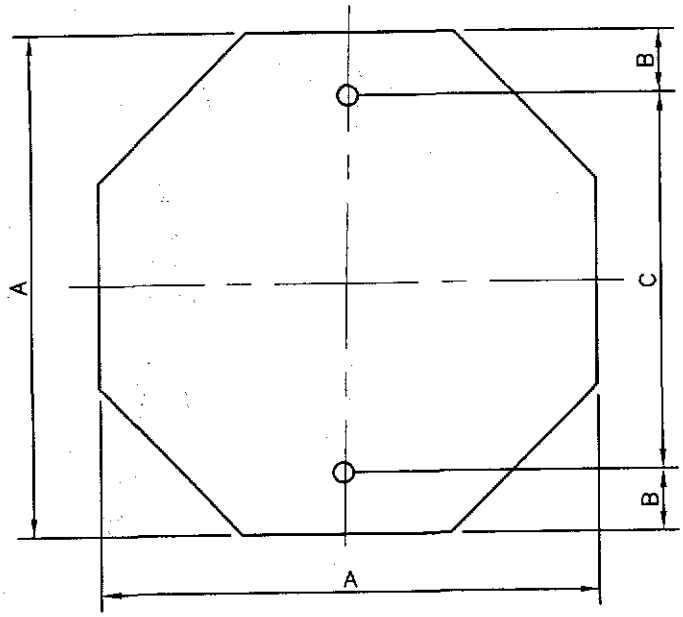

3/8" HOLE DIA.

A	B	C
24	3	18
30	3	24
36	3	30

OCTAGON

N.T.S.

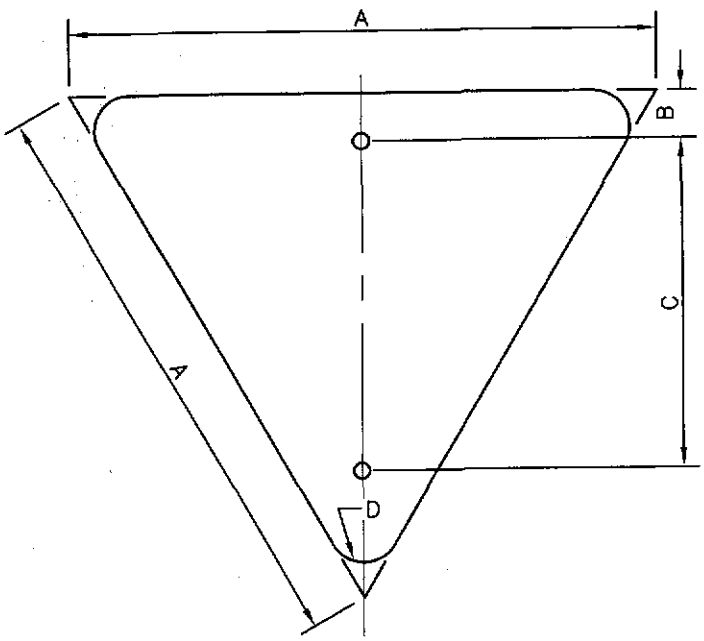

3/8" HOLE DIA.

A	B	C	D
36	3	21	2
42	3	24	2 1/2
48	3	35	3

EQUILATERAL TRIANGLE

N.T.S.

TITLE 19 - SUBDIVISION ORDINANCE

ENGINEERING DEPARTMENT

DESIGN STANDARDS FOR CONSTRUCTION

D.H.T. BLANK STANDARDS

7-4

Approved By R. A. SHUBERT
Date JUNE 03, 2008

Checked By H. M. E.
Drawn By QEC / J. R.

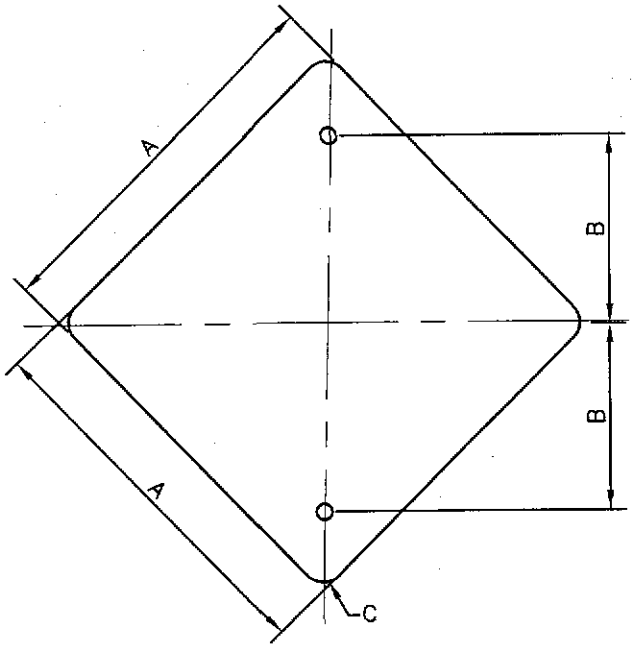

3/8" HOLE DIA.

A	B	C
24	12	1 1/2
30	15	1 7/8
36	18	2 1/4

DIAMOND

N.T.S.

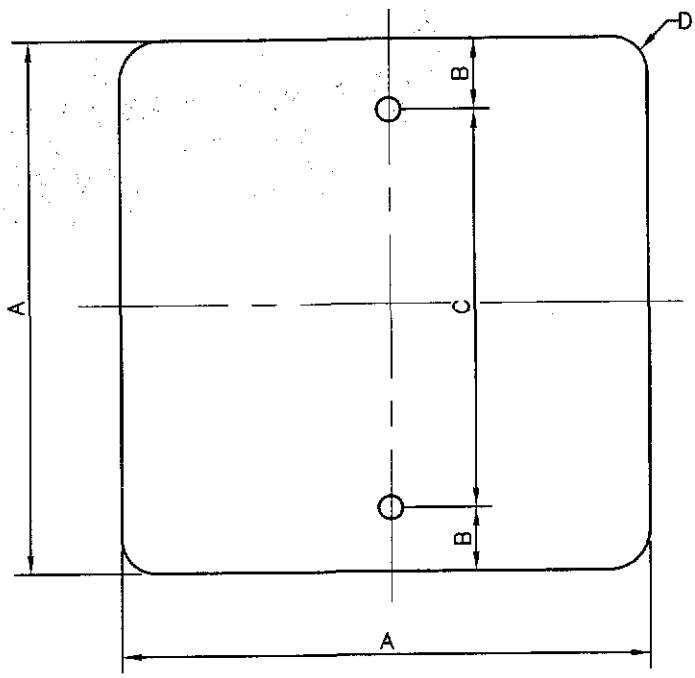

3/8" HOLE DIA.

A	B	C	D
9	1	7	–
12	3	6	1 1/2
18	3	12	1 1/2
24	3	18	1 1/2
30	3	24	1 7/8
36	3	30	2 1/4

SQUARE

N.T.S.

TITLE 19 - SUBDIVISION ORDINANCE

ENGINEERING DEPARTMENT

DESIGN STANDARDS FOR CONSTRUCTION

D.H.T. BLANK STANDARDS (continued)

7-5

Approved By R. A. SHUBERT
Date JUNE 03, 2008

Checked By H. M. E.
Drawn By QEC / J. R.

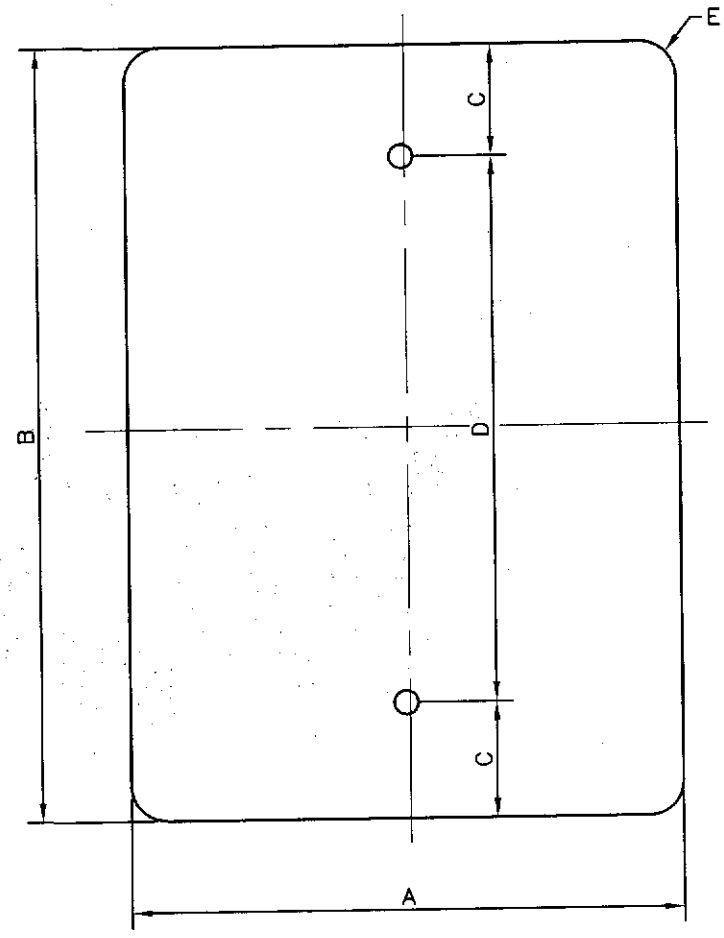

3/8" HOLE DIA.

A	B	C	D	E
9	12	3	6	1 1/2
10	18	2	14	1 1/2
10	27	2	23	1 1/2
10	36	2	32	1 1/2
12	18	1-1/2	15	1 1/2
12	24	2	20	1 1/2
12	30	1-1/8	27-3/4	1 1/2
12	36	2	32	1 1/2
12	48	2	44	1 1/2
18	24	3	18	1 1/2
18	30	1-1/2	27	1 1/2
24	30	3	24	1 1/2
24	36	3	30	1 1/2
24	48	3	42	1 1/2
30	36	3	30	1 7/8
30	42	3	36	1 7/8

VERTICAL RECTANGLE

N.T.S.

CITY OF EL PASO
SPECIFICATIONS FOR REFLECTORIZED
STREET NAME SIGNS

1. COLOR OF SIGNS : THE FINISHED SIGN MUST HAVE A REFLECTORIZED GREEN BACKGROUND. THE GREEN MUST CONFORM WITH THE BUREAU OF PUBLIC ROADS HIGHWAY GREEN. THE LEGEND MUST BE REFLECTORIZED SILVER WHITE (GREEN REVERSE SCREENED BACKGROUND WITH SILVER COPY).

2. LETTER DESIGN: THE LETTERING OF ALL LEGENDS MUST BE UPPER CASE LETTERS IN ACCORDANCE WITH "STANDARD ALPHABETS FOR HIGHWAY SIGNS" PUBLISHED BY THE FEDERAL HIGHWAY ADMINISTRATION.

3. LETTER SPACING: THE CONTROL FOR THE SPACING VALUES IN TRAFFIC LAYOUT IS THE DISTANCE RECOGNIZED AS AESTHETIC SPACING BETWEEN TWO STRAIGHT LETTERS (HN). A SPACING CONTROL OF TWO TIMES THE WIDTH OF THE STROKE OF THE LETTER SERIES TO BE USED MUST BE THE AESTHETIC CONTROL (100%). TWO AND ONE-HALF TIMES (2-1/2) THIS CONTROL MUST BE USED AS THE AESTHETIC WORD SPACE BETWEEN ELEMENTS IN THE PRIMARY LEGEND.

4. LAYOUT: THE MAXIMUM NUMBER OF LETTERS TO BE ACCOMMODATED ON A GIVEN LENGTH STREET NAME FACE MUST BE DETERMINED BY THE WIDEST LETTER SERIES POSSIBLE FOR THAT LEGEND AND THE SPACING CONTROL (100%) FOR THE SERIES USED MUST BE EXPANDED OR CONDENSED UP TO 25% IN 5% INCREMENTS.

5. THE SPACING CONTROL (100%) FOR THE SERIES USED MUST BE EXPANDED OR CONDENSED UP TO 25% IN 5% INCREMENTS FOR THE END MARGIN WITH MINIMUM OF 1".

6. THE WORD SPACE MUST BE EXPANDED UP TO 25% IN 5% INCREMENTS BUT NOT CONDENSED.

7. SPACE BETWEN PRIMARY AND BLOCK NUMBER AREA MUST BE 1/2 THE AESTHETIC WORK SPACE USED IN THE PRIMARY LEGEND.

8. SUFFIX LETTER SIZE FOR ALL LENGTHS MUST BE 2" CAPITALS, "C" SERIES, EXCEPT THAT SERIES "A" OR "B" WHERE SUFFIX ABBREVIATION EXCEEDS TWO LETTERS, MAY BE USED.

9. SIZE OF LEGEND: FOR 9" STREET NAME SIGNS, THE PRIMARY LEGEND, OR STREET NAME MUST HAVE CAPITAL LETTERS SIX INCHES (6") HIGH AND ALL SECONDARY LEGENDS, INCLUDING THE SUFFIX, BLOCK NUMBERS, MUST HAVE UPPER CASE LETTERS TWO AND ONE-HALF INCHES (2 1/2") HIGH.

10. SUFFIX LETTER SIZE FOR ALL LENGTHS MUST BE 2 1/2" CAPITALS, "C" SERIES, EXCEPT THAT SERIES "A" OR "B" WHERE SUFFIX ABBREVIATION EXCEEDS TWO LETTERS, MAY BE USED.

11. POSITION OF LEGEND: EACH SIGN FACE WILL CONSIST OF THE STREET NAME, SUFFIX, AND TWO ZEROS OF THE BLOCK NUMBER . THE ADDITIONAL NUMBERS OF THE BLOCK NUMBER WILL BE APPLIED BY THE CITY OF EL PASO. THE SUFFIX WILL BE LOCATED IN THE UPPER RIGHT CORNER AND THE BLOCK NUMBER IN THE LOWER RIGHT CORNER OF THE SIGN FACE AND THE STREET NAME CENTERED IN THE REMAINING SPACE.

12. SIGN FABRICATION: THE SIGN FACE MUST BE FABRICATED BY REVERSE SCREENING GREEN TRANSPARENT COLOR OVER SILVER REFLECTIVE SHEETING. TRANSPARENT PROCESS COLORS MUST BE AS RECOMMENDED BY THE SHEETING MANUFACTURER. CUT-OUT OR APPLIED LEGENDS ARE NOT PERMITTED. SIGN FACES MUST BE COMPRISED OF ONE PIECE OR PANEL OF REFLECTIVE SHEETING.

13. TYPE OF SHEETING: ENGINEER GRADE REFLECTIVE SHEETING MUST BE USED IN THE FABRICATION OF THE STREET NAME SIGN FACES.

CITY OF EL PASO

LAYOUT FOR 9" STREET NAME SIGNS

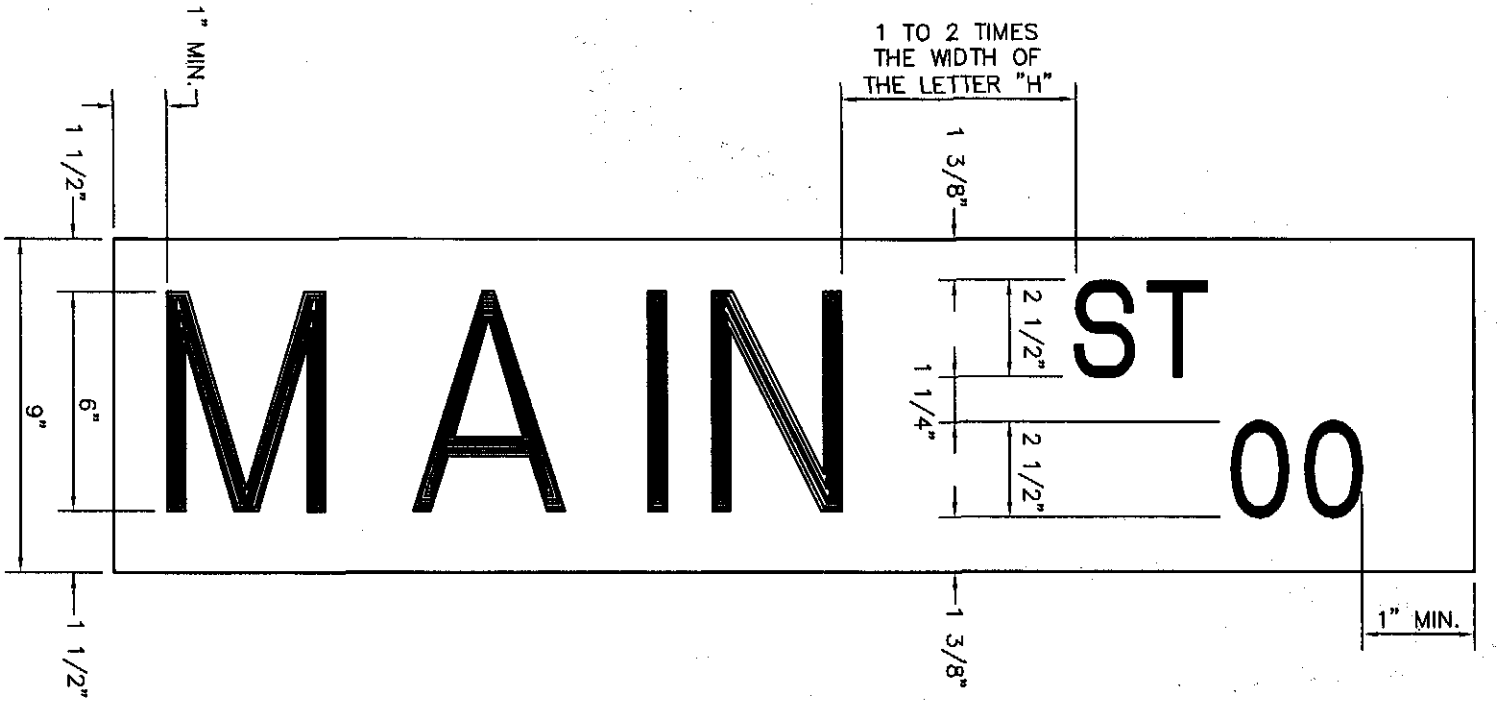

SIGN CLASS	SIGN LENGTH	PRIMARY LETTERS SIZE & SERIES	SUFFIX & BLOCK NUMBER SIZE & SERIES
9" ARTERIAL STREETS	36"	6" C,D SERIES	3" C SERIES
	42"	6" C,D SERIES	3" C SERIES
	48"	6" A,B,C,D SERIES	3" C SERIES

TITLE 19 - SUBDIVISION ORDINANCE

ENGINEERING DEPARTMENT

DESIGN STANDARDS FOR CONSTRUCTION

9" STREET NAME SIGN

7-9

Approved By R. A. SHUBERT
Date JUNE 03, 2008

Checked By H. M. E.
Drawn By QEC / J. R.

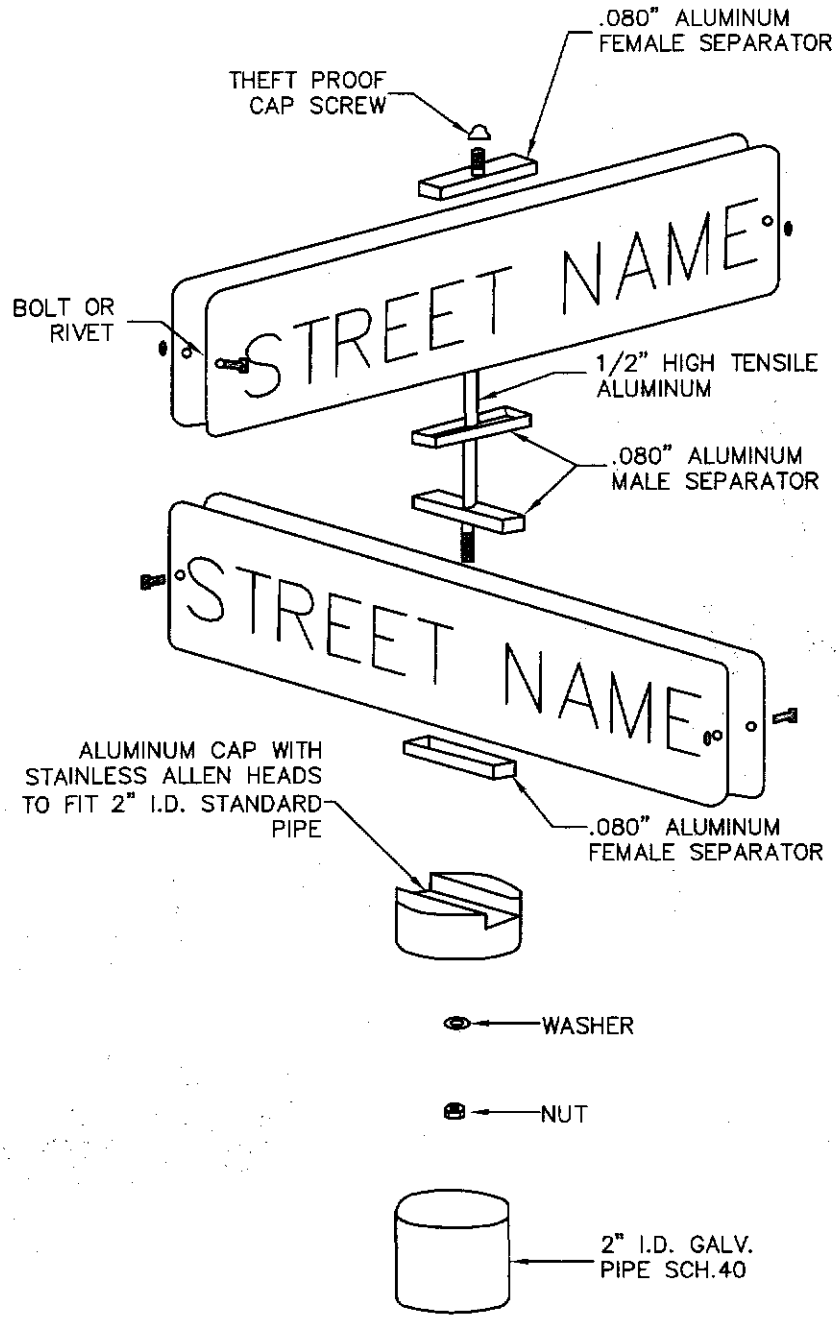

9" STREET NAME ASSEMBLY

TITLE 19 - SUBDIVISION ORDINANCE

ENGINEERING DEPARTMENT

DESIGN STANDARDS FOR CONSTRUCTION

9" STREET NAME SIGN ASSEMBLY

7-10

Approved By R. A. SHUBERT	Checked By H. M. E.
Date JUNE 03, 2008	Drawn By QEC / J. R.

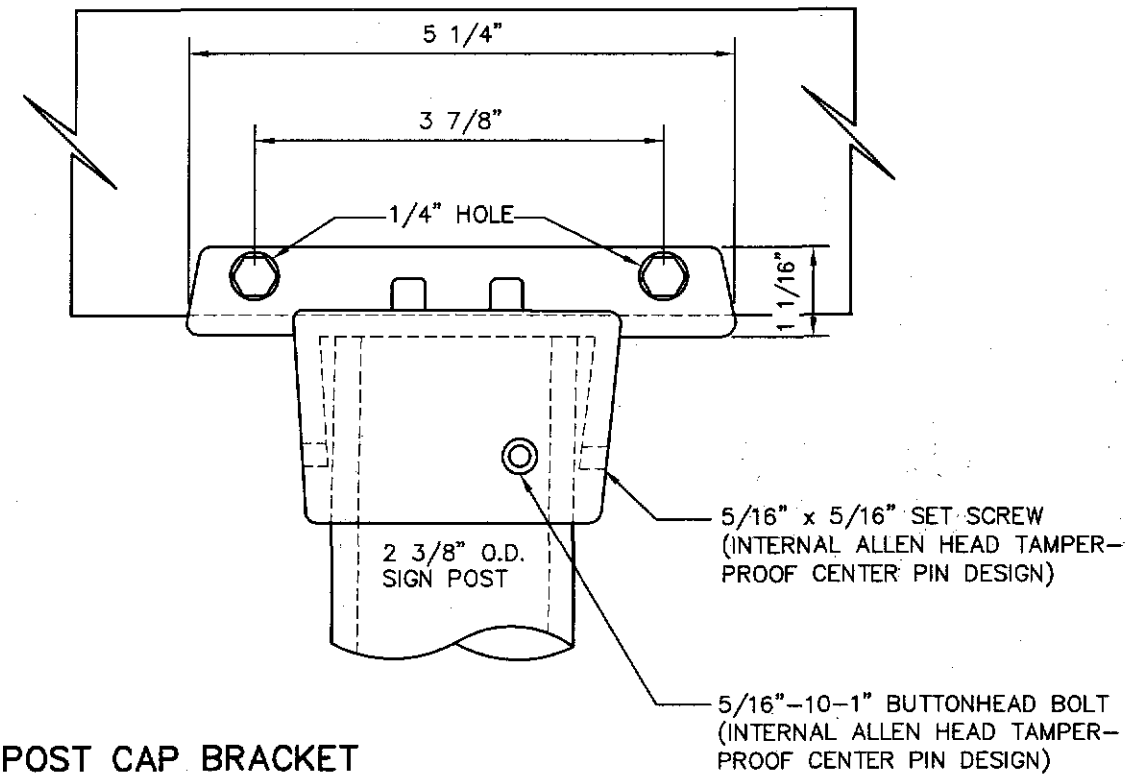

POST CAP BRACKET (FOR EXTRUDED BLADES)

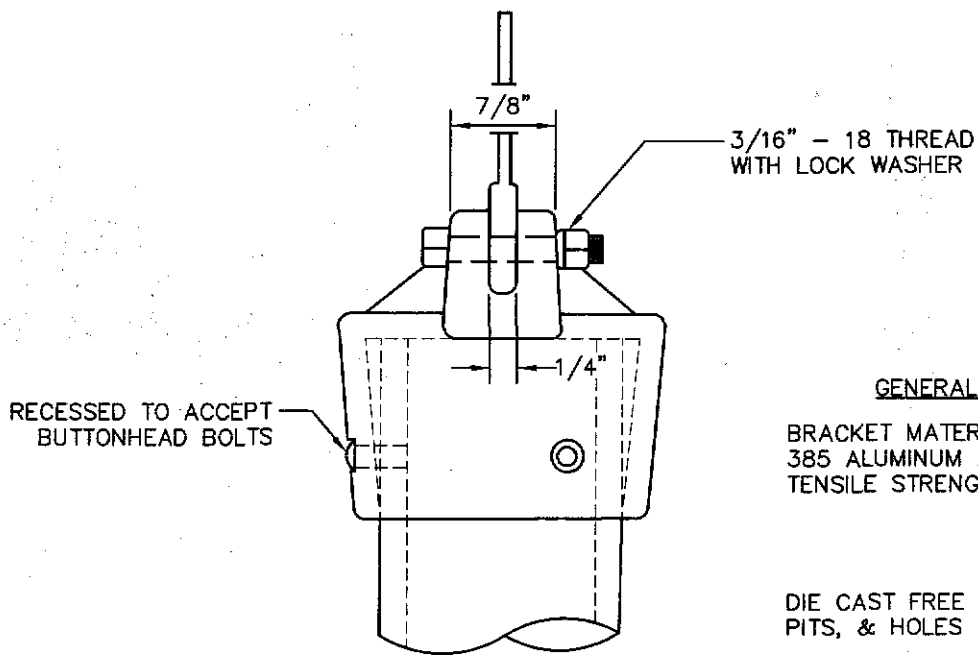

GENERAL NOTES

BRACKET MATERIALS TO BE
385 ALUMINUM ALLOY
TENSILE STRENGTH 4900 P.S.I.

DIE CAST FREE OF BURRS,
PITS, & HOLES

TITLE 19 - SUBDIVISION ORDINANCE

ENGINEERING DEPARTMENT

DESIGN STANDARDS
FOR CONSTRUCTION

9" STREET NAME SIGN
ASSEMBLY
(continued)
7-11

Approved By R. A. SHUBERT	Checked By H. M. E.
Date JUNE 03, 2008	Drawn By QEC / J. R.

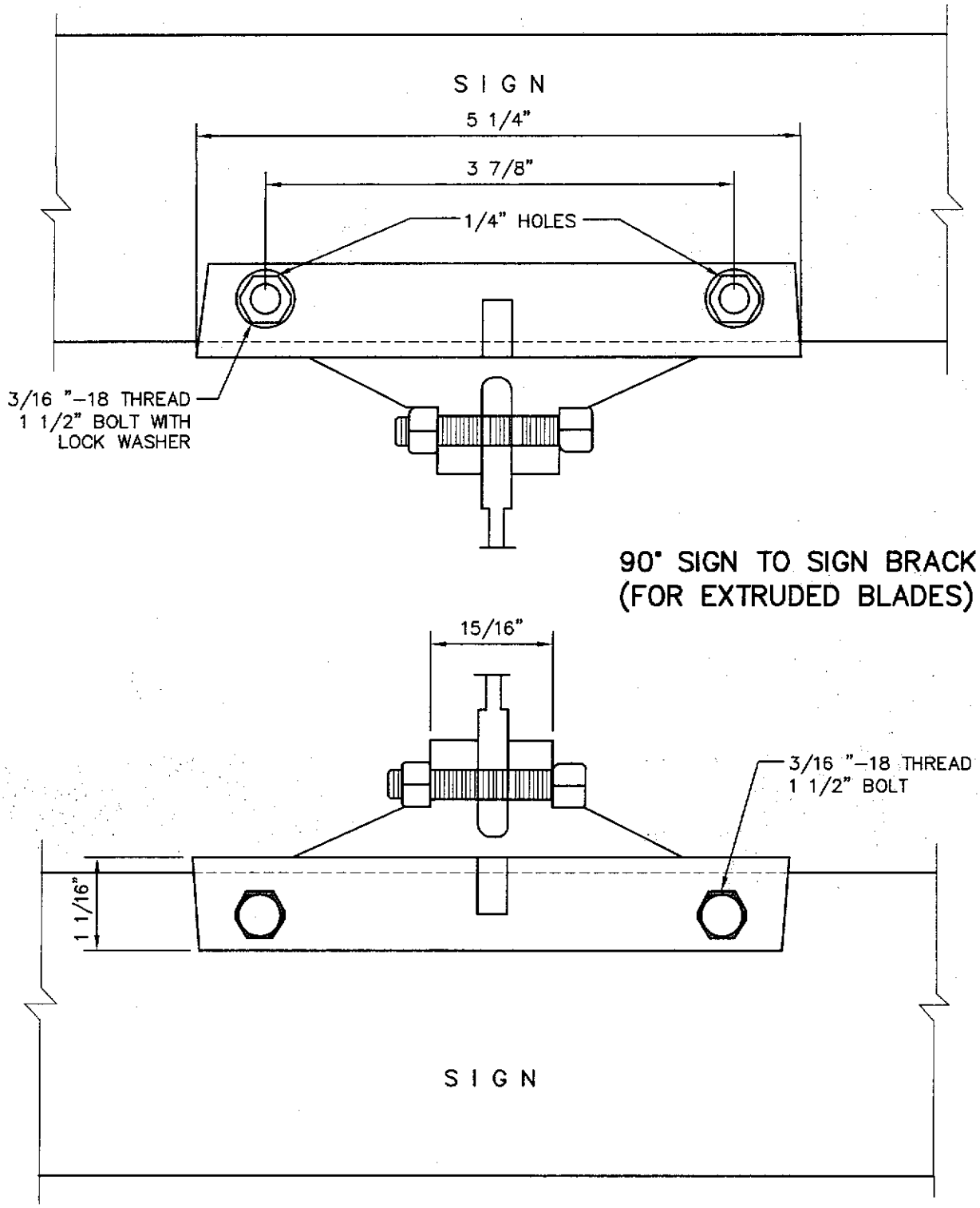

TITLE 19 - SUBDIVISION ORDINANCE

ENGINEERING DEPARTMENT

DESIGN STANDARDS
FOR CONSTRUCTION

9" STREET NAME SIGN
ASSEMBLY
(continued)
7-12

Approved By R. A. SHUBERT	Checked By H. M. E.
Date JUNE 03, 2008	Drawn By QEC / J. R.

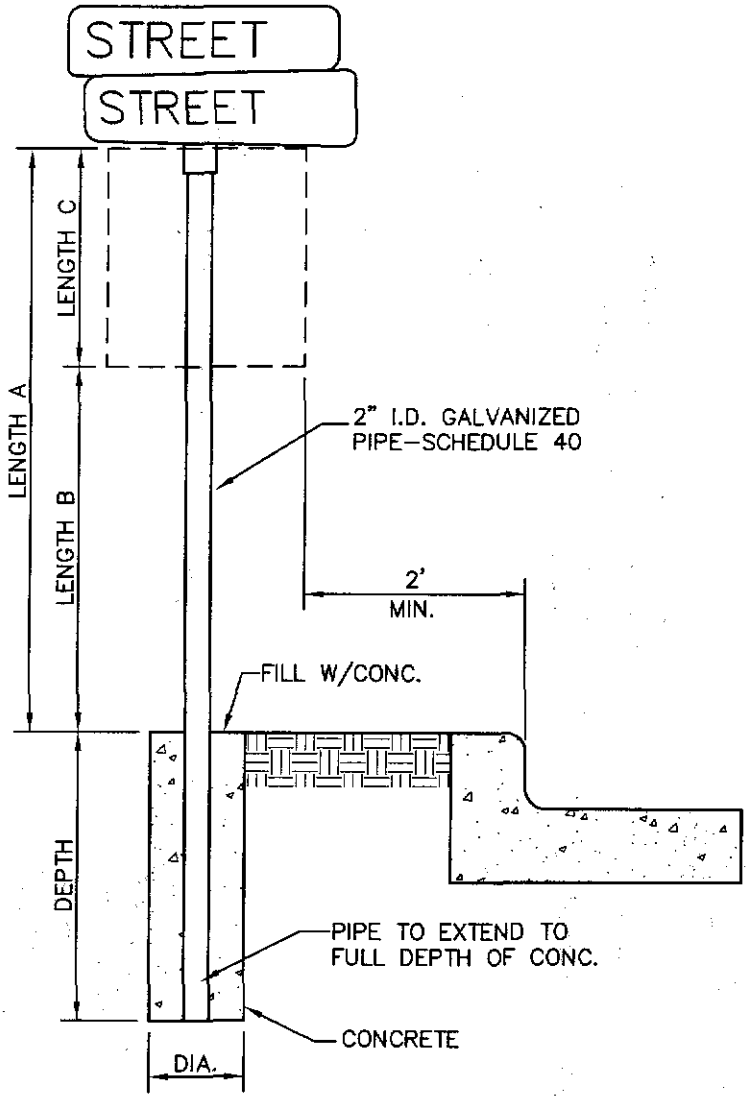

DIA.= 8" MIN IN SOIL OR GRAVEL
3" MIN. UNDER CONC SIDEWALK

SIGN POST INSTALLATION

LENGTH A	LENGTH B	LENGTH C	DEPTH
10 FT	7 FT	LARGER THAN 24"	2 FT
9 FT	7 FT	SMALLER THAN 24"	1 1/2 FT

TITLE 19 - SUBDIVISION ORDINANCE

ENGINEERING DEPARTMENT

DESIGN STANDARDS
FOR CONSTRUCTION

SIGN POST INSTALLATION

7-13

Approved By R. A. SHUBERT
Date JUNE 03, 2008

Checked By H. M. E.
Drawn By QEC / J. R.

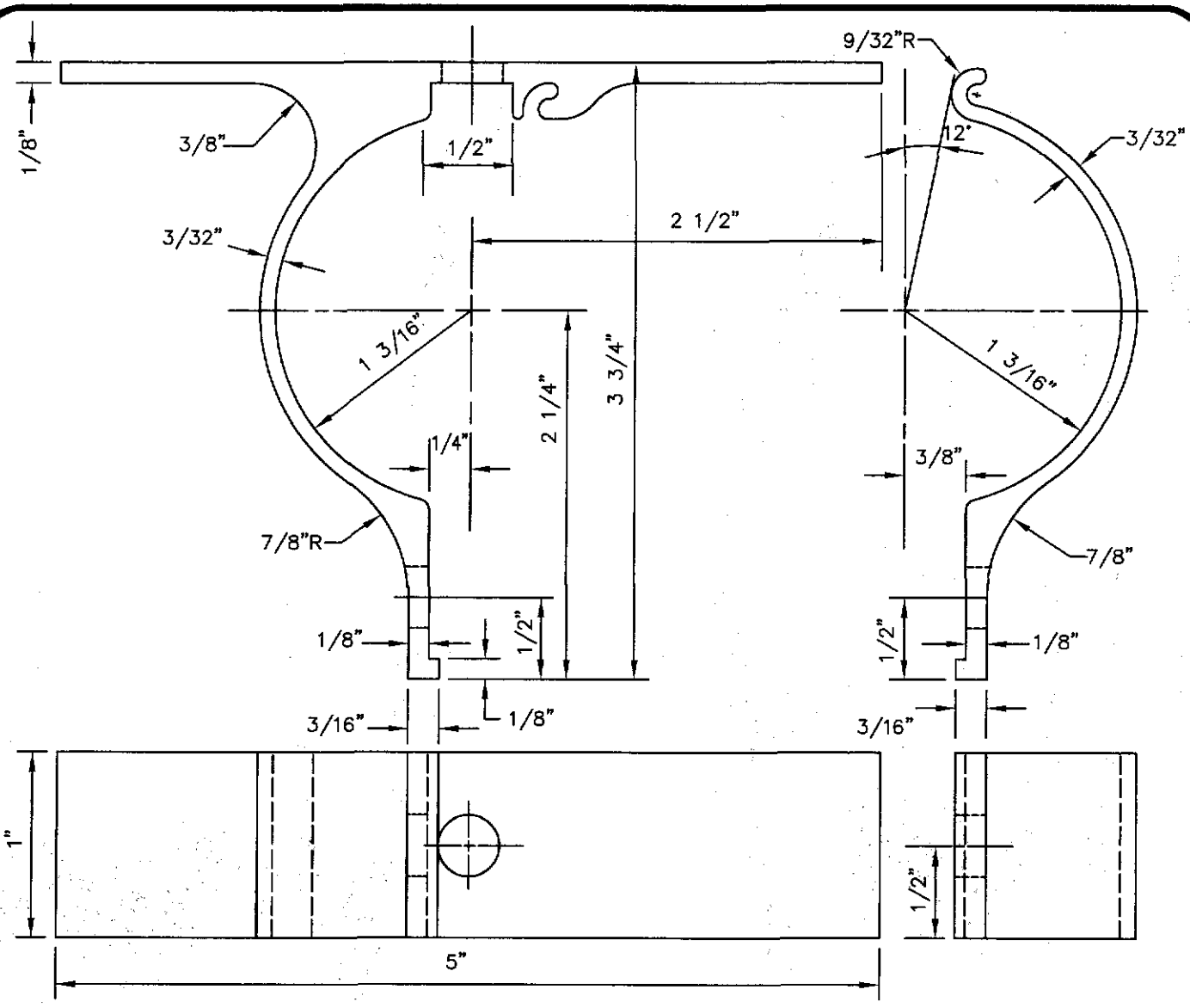

ALUMINUM SIGN CLAMP BRACKET FOR TRAFFIC CONTROL SIGNS

N.T.S.

NOTES:

1. ALL HOLES 3/8" PUNCH
2. FILLETS & ROUNDS 1/16"=R
3. FURNISH THE FOLOWING HARDWARE FOR EACH BRACKET:
   1 – 5/16"x 3/4" BOLTS
   1 – 5/16"x 1 1/4" BOLT
   2 – 5/16"x NUTS & LOCK WASHERS
   2 – FLAT WASHERS
4. THE BRACKET IS TO BE MADE FROM HIGH STRENGTH ALUMINUM ALLOY. THE BRACKET IS TO EMPLOY AN EXTRUDED INTERLOCKING FEATURE OFFERING A RIGID MEANS OF ATTACHING A FLAT SIGN TO A STANDARD 2" (2/8" O.D.) TUBULAR POST.

TITLE 19 - SUBDIVISION ORDINANCE

ENGINEERING DEPARTMENT

DESIGN STANDARDS FOR CONSTRUCTION

ALUMINUM SIGN CLAMP BRACKET FOR TRAFFIC CONTROL SIGNS
7-14

Approved By R. A. SHUBERT	Checked By H. M. E.
Date JUNE 03, 2008	Drawn By QBC / J. R.

SIGN POST SPECIFICATIONS

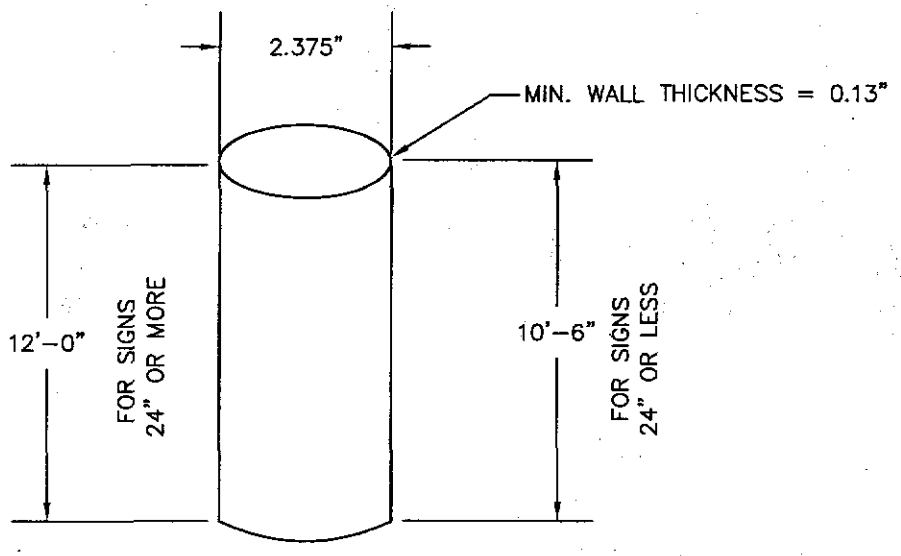

NOTES:

1. WELD ALONG ITS LENGTH TO FORM VIRTUALLY SEAMLESS.

2. POST SHALL BE HOT-DIPPED ZINC GALVANIZED UNIFORMLY ON THE OUTSIDE WITH A NOMINAL ZINC WEIGHT OF 1.0 OUNCE PER SQUARE FOOT.

3. THE ZINC COATING IS TO BE OVER-COATED WITH A CHROMITE CONVERSION AND ACRYLIC COATING TO PROVIDE RESISTANCE TO RUSTING AND CORROSION.

4. THE INSIDE OF THE POST SHALL BE COATED WITH AN ORGANIC MATERIAL FOR PROTECTION AGAINST RUST.

5. BOTH ENDS ARE TO BE SQUARELY CUT WITHOUT FLARE.

6. POST SHALL BE FREE OF WARPS, CORROSION, OR OTHER DEFECTS.

7. RING WELDS OR SPLICES WILL NOT BE ACCEPTABLE.

8. BENDING STRENGTH AS SPECIFIED BY AASHTO FOR SCHEDULE 40 PIPE.

9. POST SHALL BE BUNDLED WITH METAL STRAPS AND SHALL NOT EXCEED 37 POST PER BUNDLE.

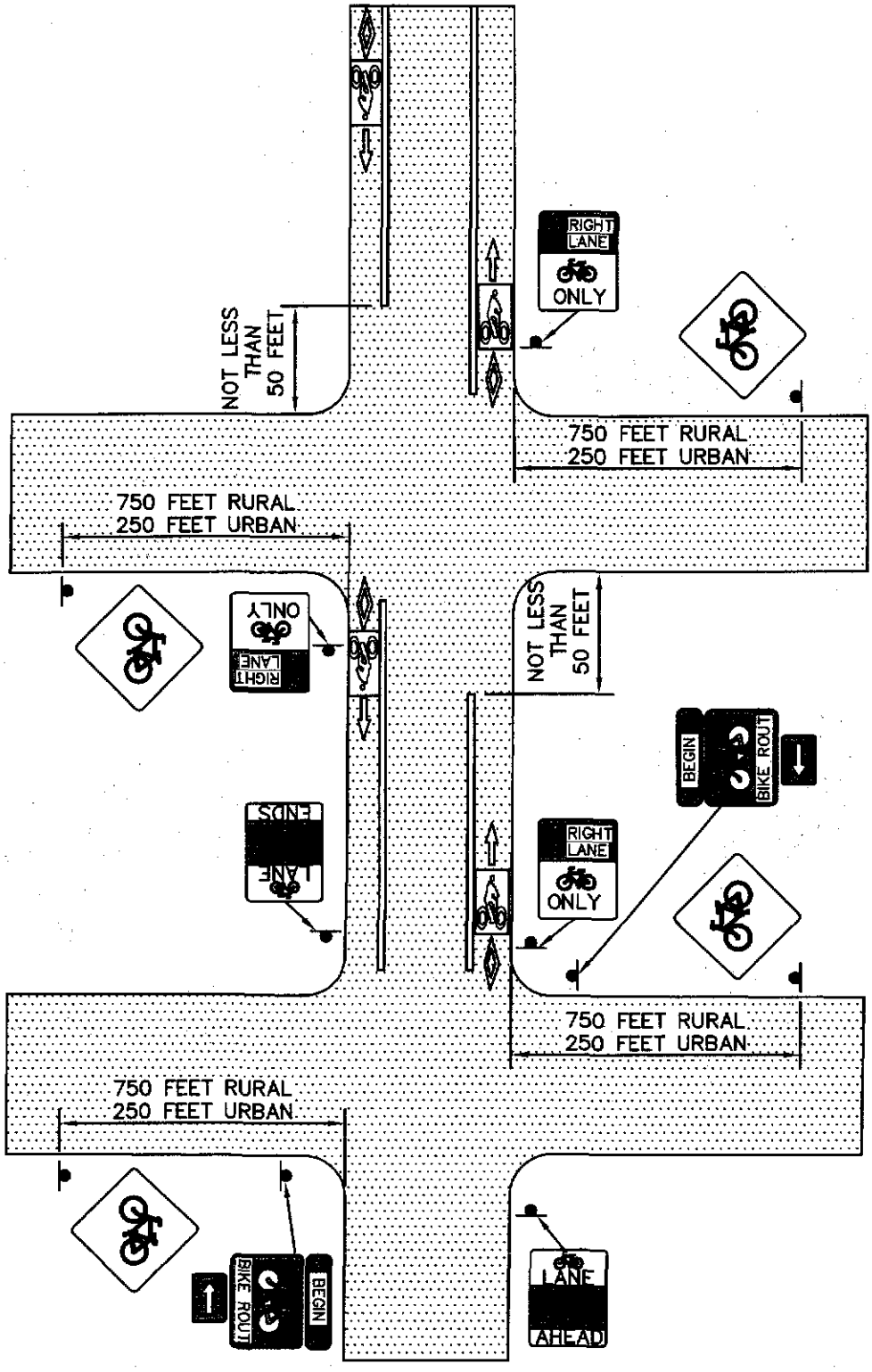

TITLE 19 - SUBDIVISION ORDINANCE

ENGINEERING DEPARTMENT

DESIGN STANDARDS FOR CONSTRUCTION

BIKE LANE SIGNS AND MARKINGS

7-16

Approved By R. A. SHUBERT	Checked By H. M. E.
Date JUNE 03, 2008	Drawn By QEC / J. R.

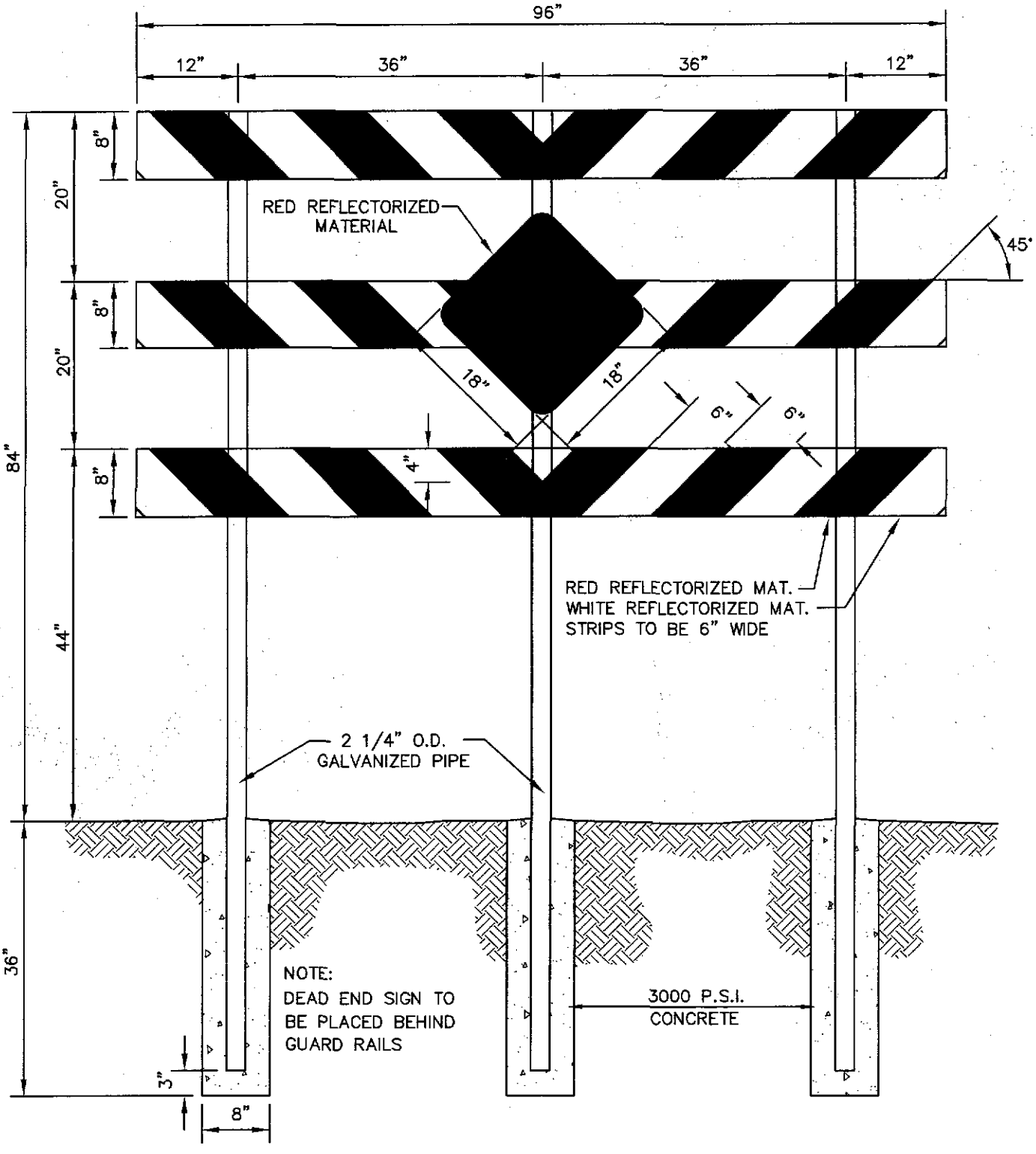

DEAD END SIGN

TITLE 19 - SUBDIVISION ORDINANCE

ENGINEERING DEPARTMENT

DESIGN STANDARDS FOR CONSTRUCTION

DEAD END SIGN

7-17A

Approved By R. A. SHUBERT	Checked By H. M. E.
Date JUNE 03, 2008	Drawn By QEC / J. R.

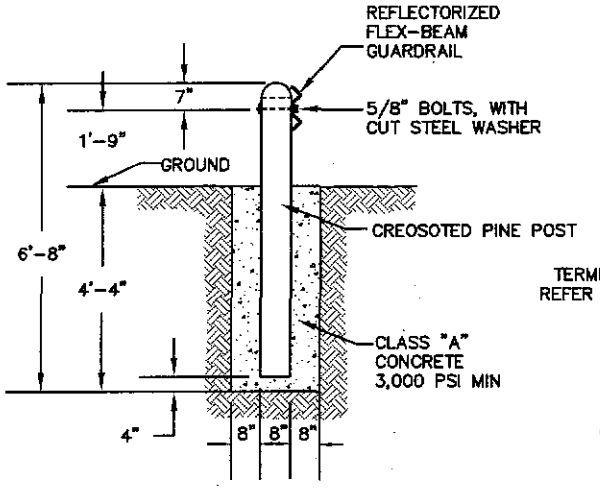

POST DETAIL

SCALE: N.T.S.

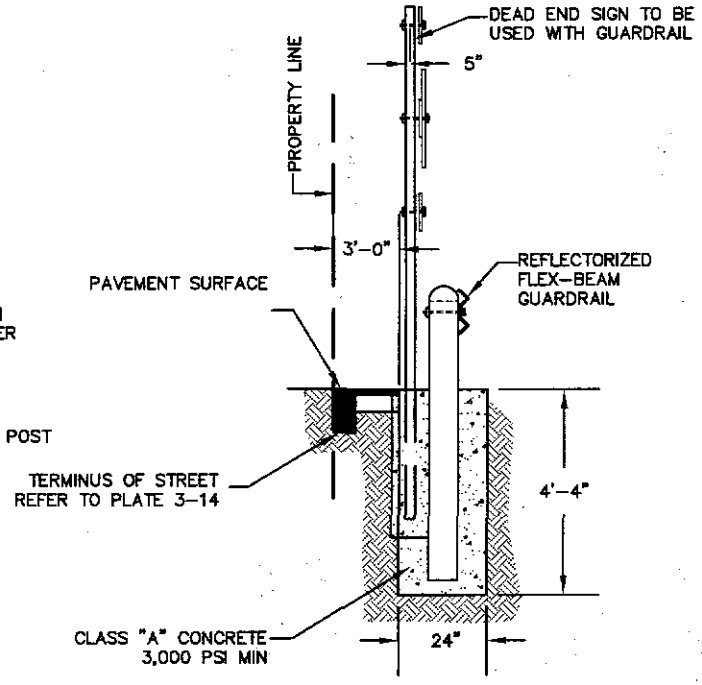

SECTION

SCALE: N.T.S.

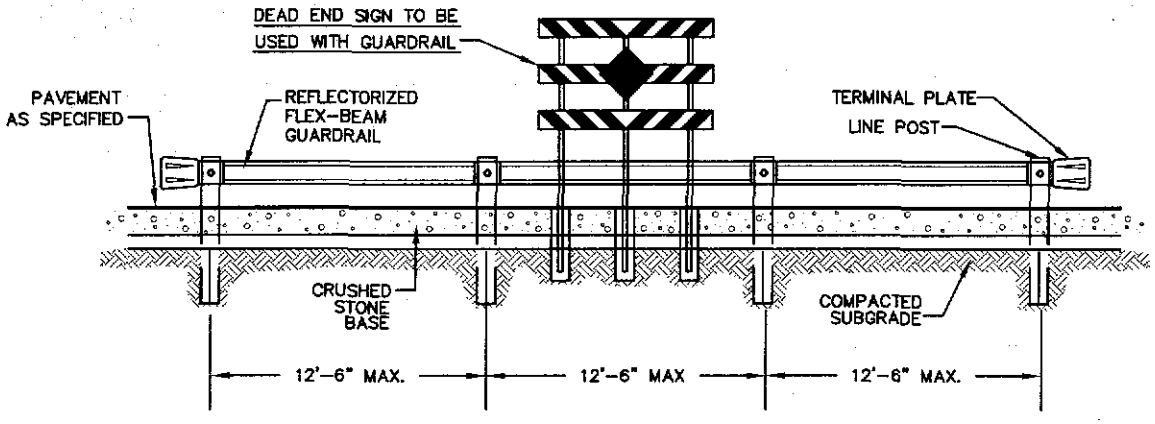

GUARDRAIL/SIGN ASSEMBLY AT DEAD END STREET DETAIL

TITLE 19 - SUBDIVISION ORDINANCE

ENGINEERING DEPARTMENT

DESIGN STANDARDS
FOR CONSTRUCTION

GUARDRAIL SIGN
ASSEMBLY AT DEAD END
7-17B

Approved By R. A. SHUBERT	Checked By H. M. E.
Date JUNE 03, 2008	Drawn By QEC / J. R.

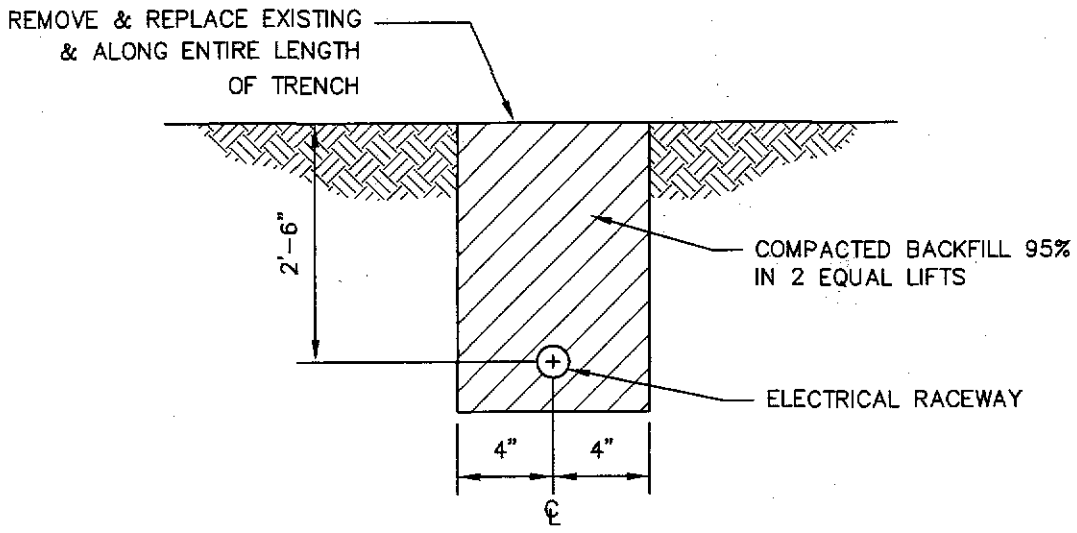

TYPICAL ELECTRICAL RACEWAY TRENCH DETAIL

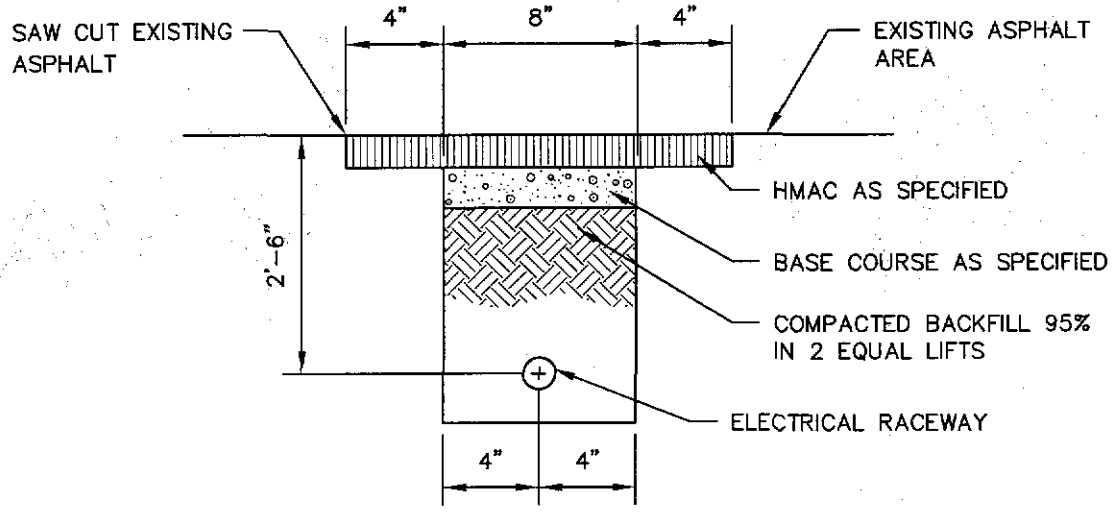

TYPICAL ELECTRICAL RACEWAY TRENCH DETAIL

KEYED NOTES:

1. TRENCHES IN AREAS WITH GRASS, DIRT, PAVERS, ETC. SHALL BE REPLACED ALONG ENTIRE LENGTH OF TRENCH.

TITLE 19 - SUBDIVISION ORDINANCE

ENGINEERING DEPARTMENT

DESIGN STANDARDS FOR CONSTRUCTION

TYPICAL ELECTRICAL RACEWAY TRENCH DETAIL
7-18

Approved By R. A. SHUBERT	Checked By H. M. E.
Date JUNE 03, 2008	Drawn By QEC / J. R.

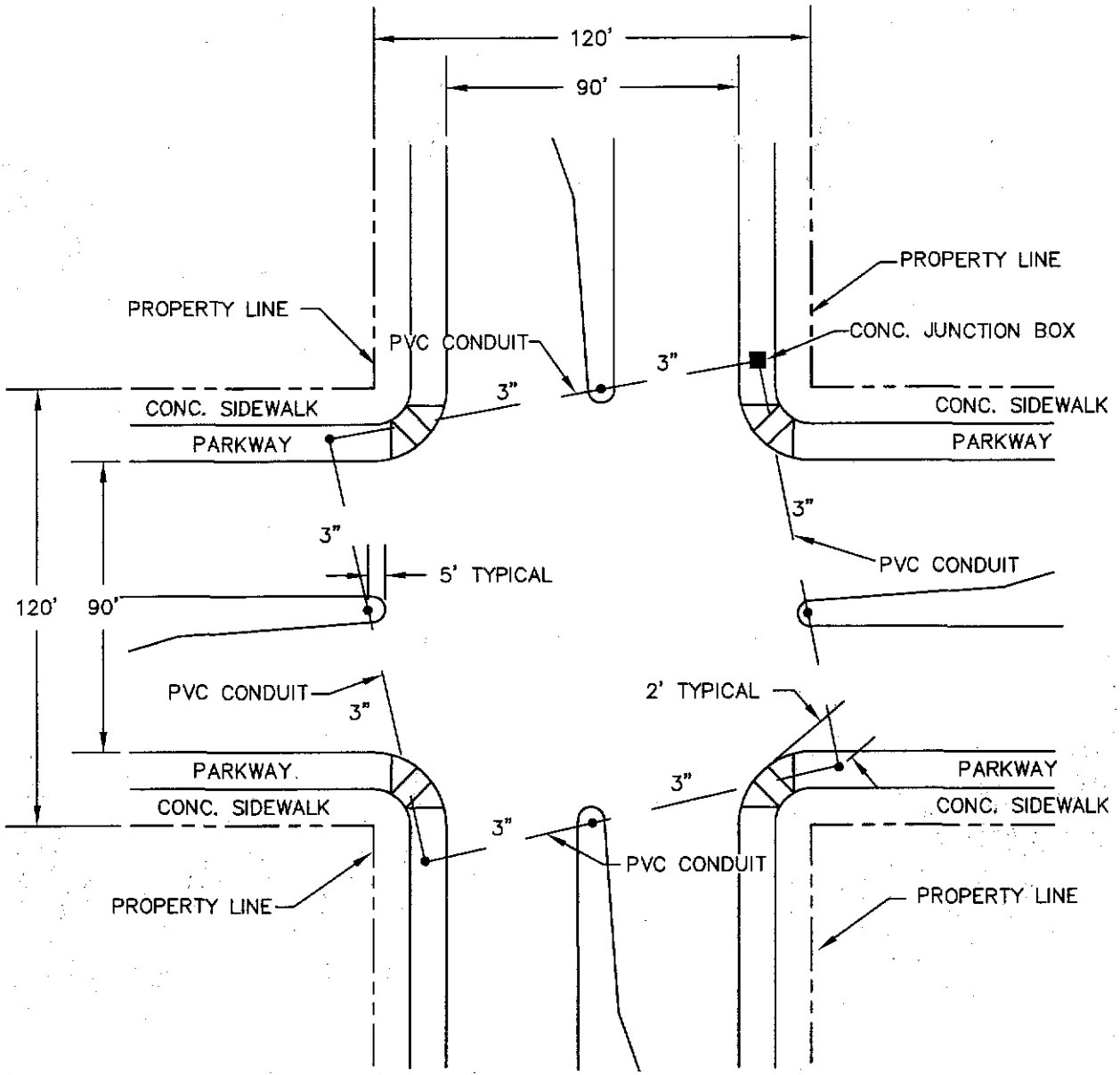

NOTE:
CONDUIT SHALL BE HIGH IMPACT P.V.C. – 3" SCHEDULE 40 AS PER CITY SPECIFICATIONS.

TYPICAL INTERSECTION

MAJOR ARTERIAL – MAJOR ARTERIAL

TITLE 19 - SUBDIVISION ORDINANCE

ENGINEERING DEPARTMENT

DESIGN STANDARDS FOR CONSTRUCTION

TRAFFIC SIGNAL CONDUIT LAYOUT (MAJOR-MAJOR)
7-19

Approved By R. A. SHUBERT	Checked By H. M. E.
Date JUNE 03, 2008	Drawn By QEC / J. R.

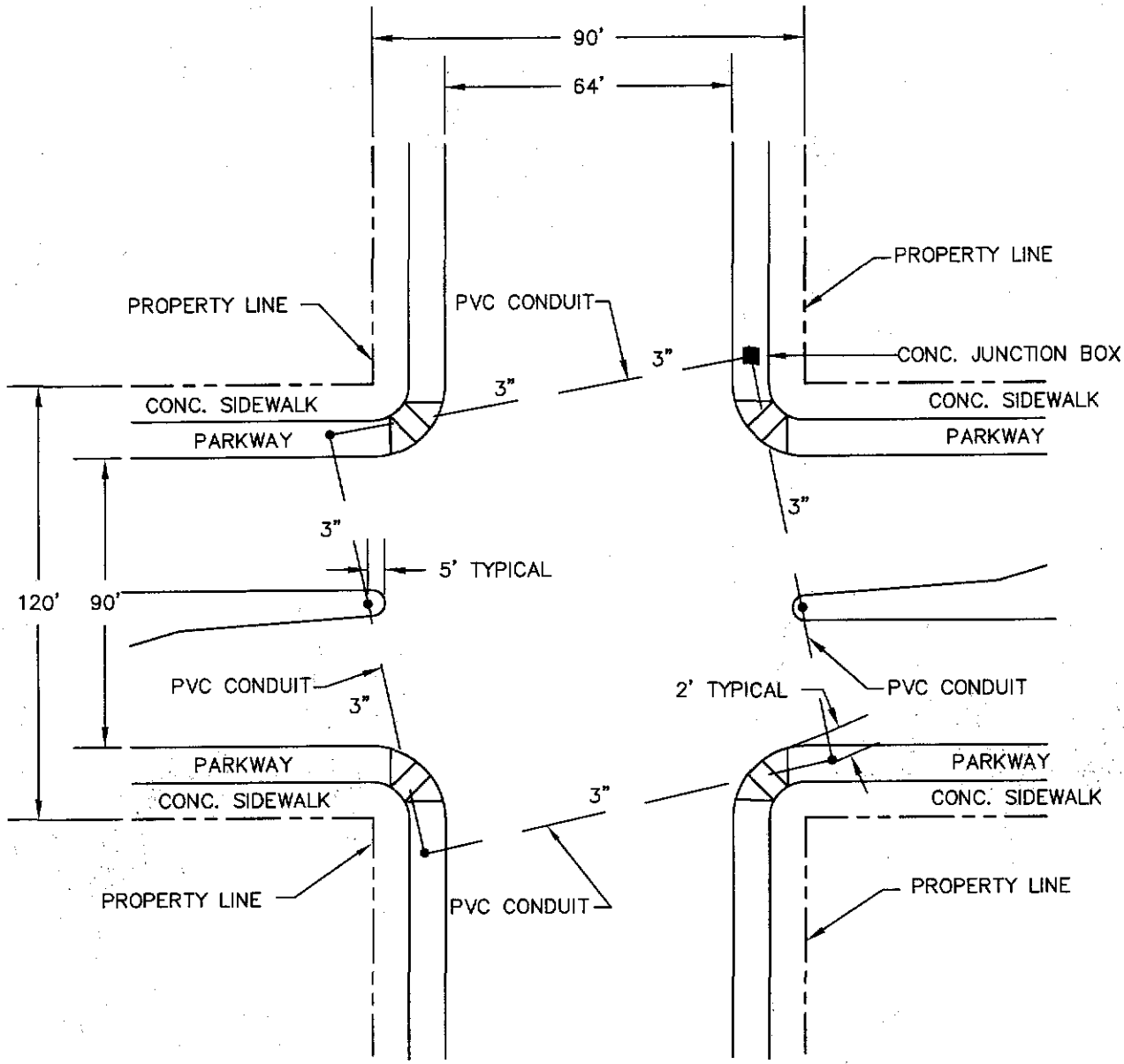

NOTE:
CONDUIT SHALL BE HIGH IMPACT P.V.C. – 3" SCHEDULE 40 AS PER CITY SPECIFICATIONS.

TYPICAL INTERSECTION

MAJOR ARTERIAL – MINOR ARTERIAL

TITLE 19 - SUBDIVISION ORDINANCE

ENGINEERING DEPARTMENT

DESIGN STANDARDS FOR CONSTRUCTION

TRAFFIC SIGNAL CONDUIT LAYOUT (MAJOR-MINOR)
7-20

Approved By R. A. SHUBERT	Checked By H. M. E.
Date JUNE 03, 2008	Drawn By QEC / J. R.

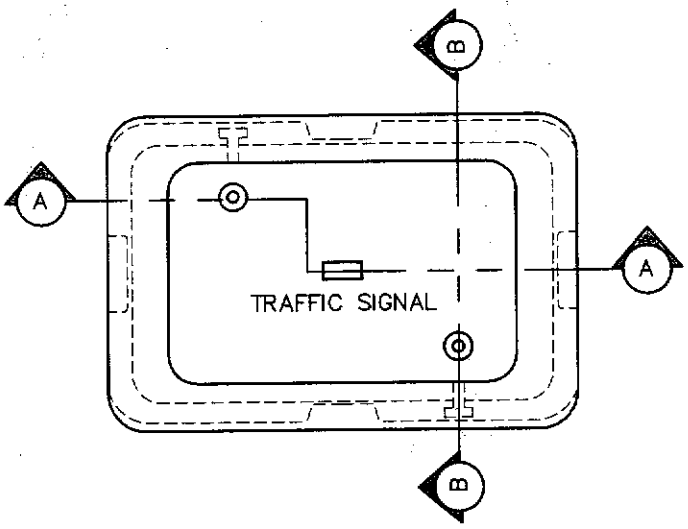

PLAN VIEW

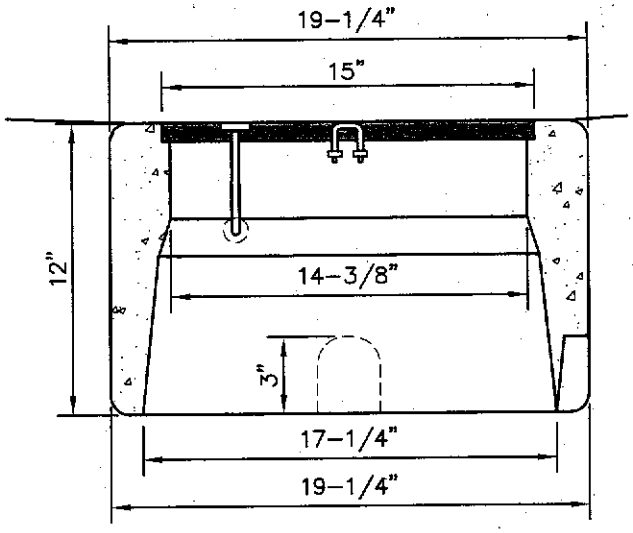

SECTION A-A

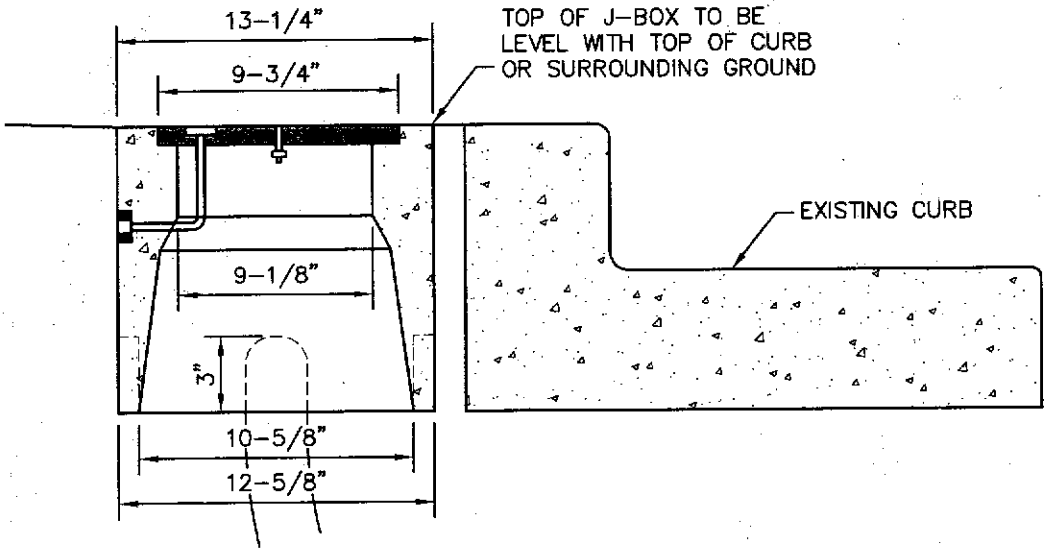

SECTION B-B

NOTE:
PROPOSED J-BOXES TO BE PLACED EVERY 150 FEET UNLESS OTHERWISE SPECIFIED BY ENGINEER.

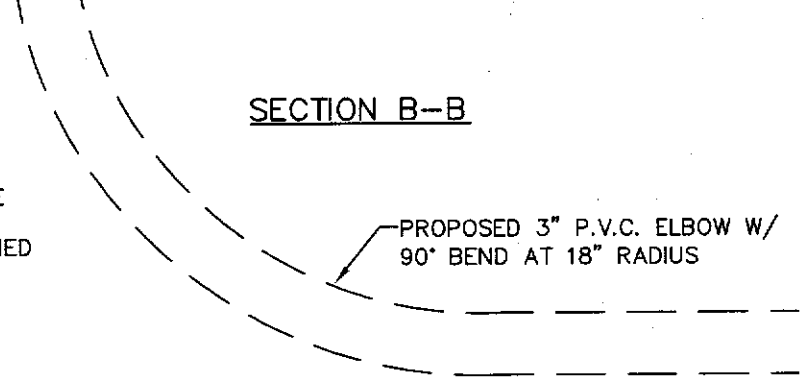

TYPICAL JUNCTION BOX

TITLE 19 - SUBDIVISION ORDINANCE

ENGINEERING DEPARTMENT

DESIGN STANDARDS FOR CONSTRUCTION

TYPICAL TRAFFIC SIGNAL JUNCTION BOX

7-21

Approved By R. A. SHUBERT	Checked By H. M. E.
Date JUNE 03, 2008	Drawn By QEC / J. R.

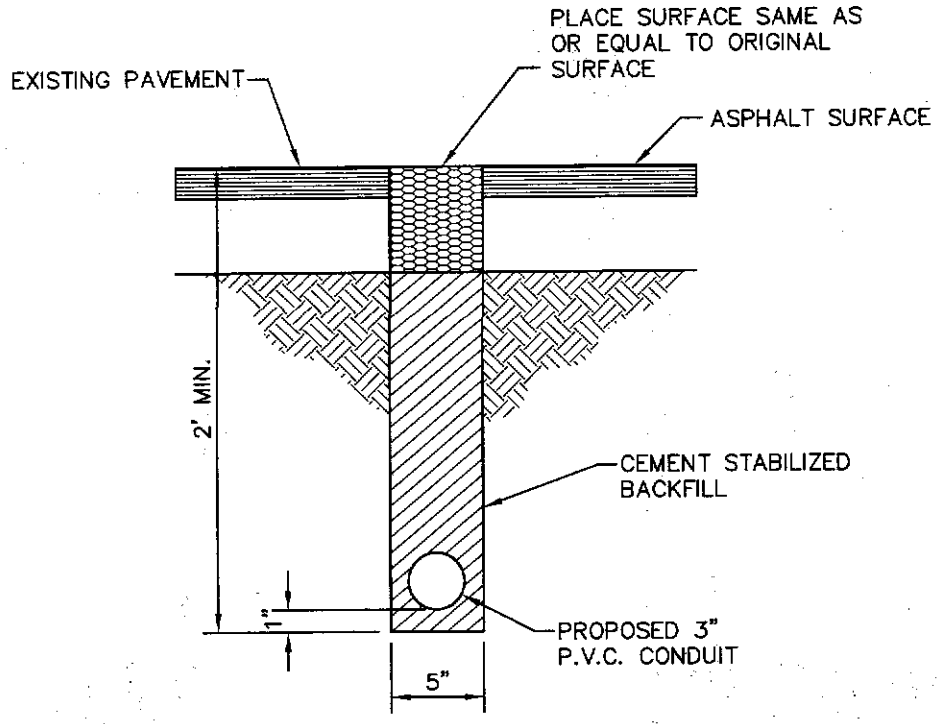

PAVEMENT CUT FOR CONDUIT PLACEMENT

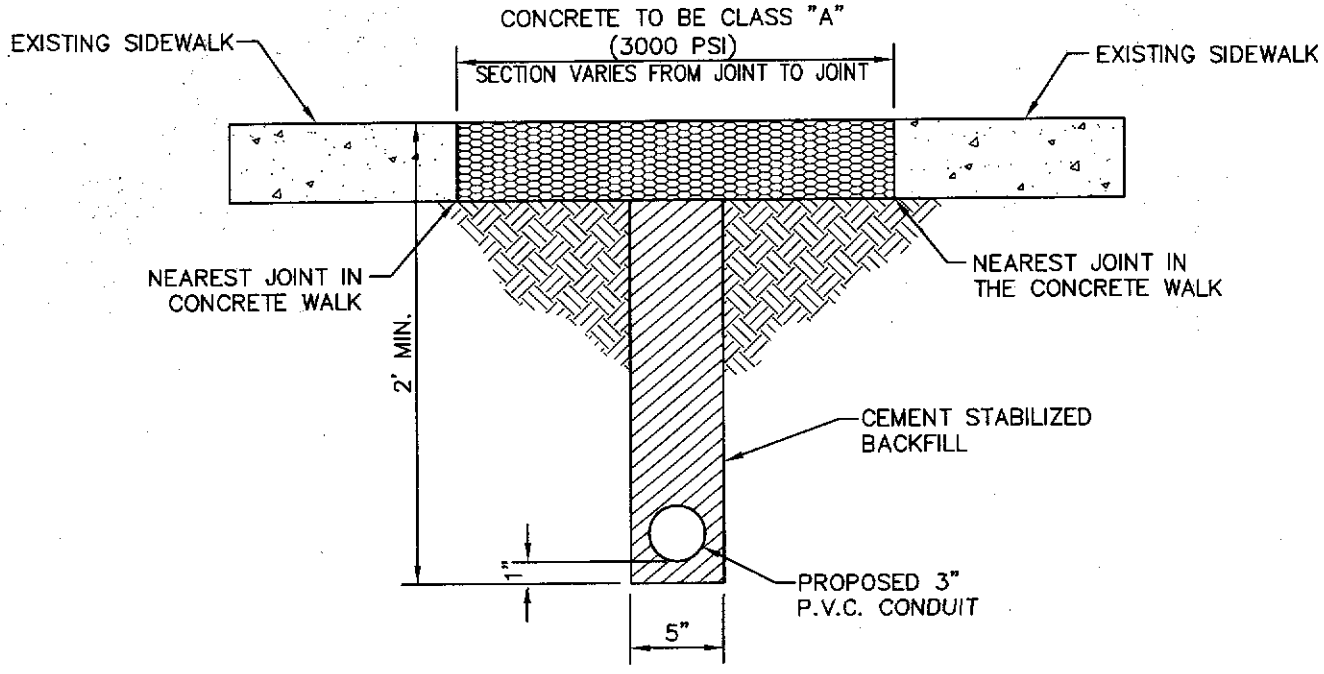

SIDEWALK CUT FOR CONDUIT PLACEMENT

TITLE 19 - SUBDIVISION ORDINANCE

ENGINEERING DEPARTMENT

DESIGN STANDARDS
FOR CONSTRUCTION

TYPICAL CUTS FOR
CONDUIT PLACEMENT OF
TRAFFIC SIGNALS
7-22

Approved By R. A. SHUBERT	Checked By H. M. E.
Date JUNE 03, 2008	Drawn By QEC / J. R.

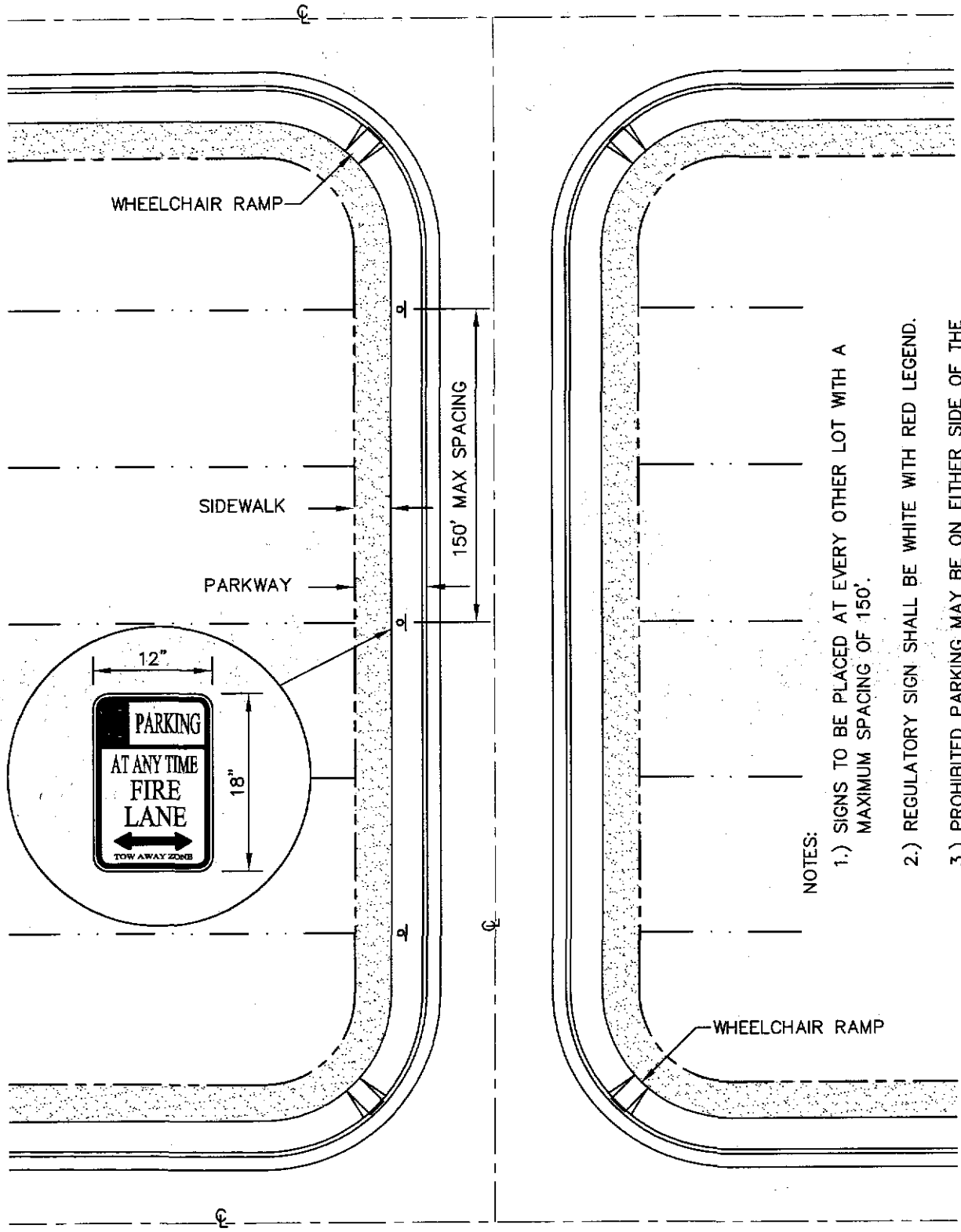

NOTES:

1.) SIGNS TO BE PLACED AT EVERY OTHER LOT WITH A MAXIMUM SPACING OF 150'.

2.) REGULATORY SIGN SHALL BE WHITE WITH RED LEGEND.

3.) PROHIBITED PARKING MAY BE ON EITHER SIDE OF THE STREET AS ESTABLISHED BY SUBDIVISION PLAT.

TITLE 19 - SUBDIVISION ORDINANCE

ENGINEERING DEPARTMENT

DESIGN STANDARDS FOR CONSTRUCTION

PROHIBITED PARKING SIGNAGE (FIRE-LANE)
7-23

Approved By R. A. SHUBERT	Checked By H. M. E.
Date JUNE 03, 2008	Drawn By QEC / J. R.

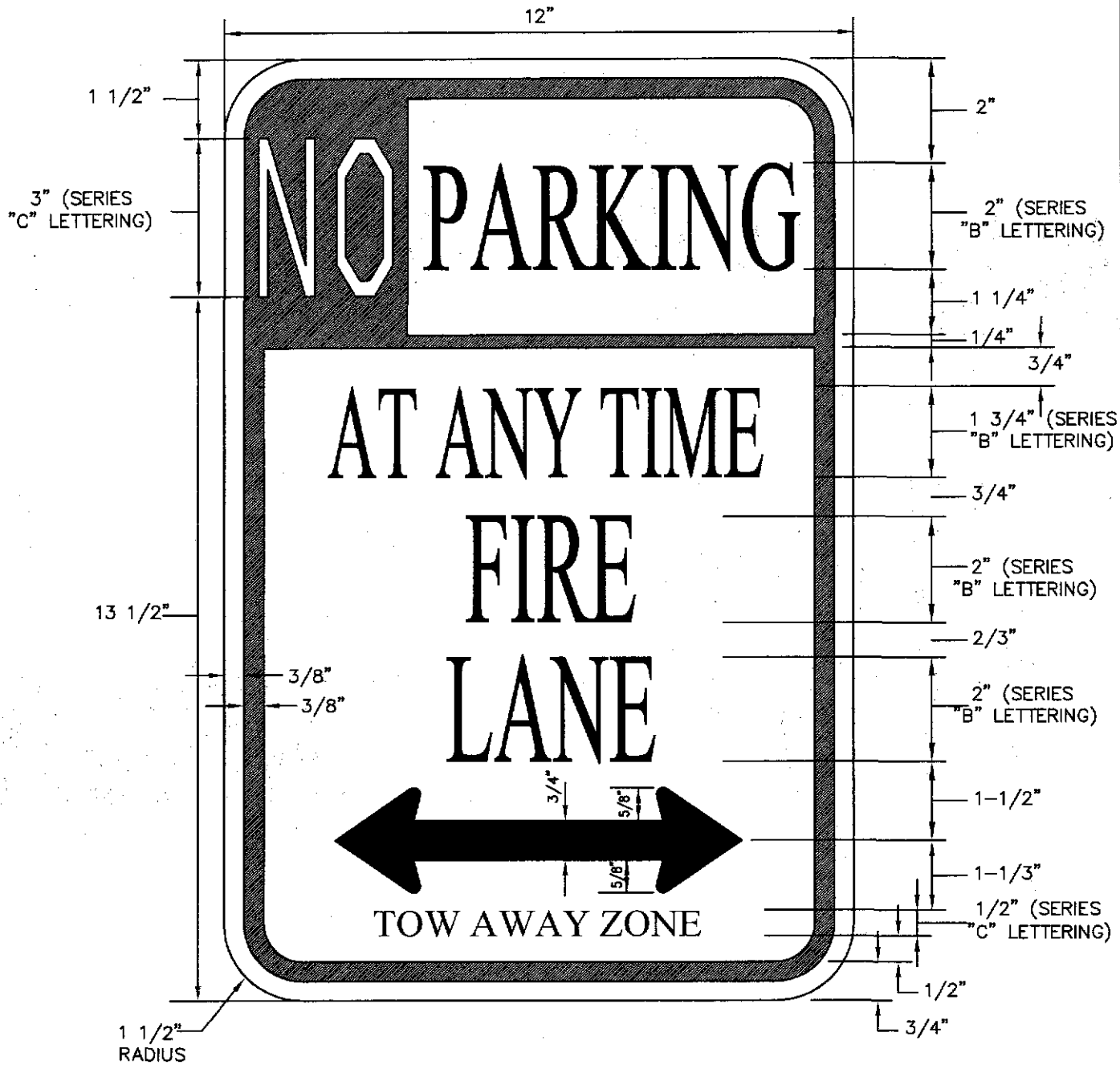

COLORS

LEGEND ---------- RED
BACKGROUND ---------- WHITE

TITLE 19 - SUBDIVISION ORDINANCE

ENGINEERING DEPARTMENT

DESIGN STANDARDS FOR CONSTRUCTION

NO PARKING
FIRE LANE SIGN

7-24

Approved By R. A. SHUBERT	Checked By H. M. E.
Date JUNE 03, 2008	Drawn By QEC / J. R.

SECTION 8

SECTION 8

STREET LIGHTING

TITLE	PAGE
RESIDENTIAL STREET LIGHTING	8-1
RESIDENTIAL STREET LIGHT WOOD POLE	8-2
RESIDENTIAL STREET LIGHT WOOD POLE (connection to service enclosure)	8-3
RESIDENTIAL STREET LIGHTING MATERIAL LIST	8-4
RESIDENTIAL STREET LIGHT STEEL POLE	8-5 thru 8-6

The Subdivider shall furnish and install street lights along all public and private streets, whether within the corporate limits or within the extraterritorial jurisdiction. Such street lights shall comply with the City of El Paso lighting ordinance found at Chapter 18.18 of the El Paso Municipal Code. The following standards shall apply in determining the number of street lights required, and are based on approved standards of the American National Standards Institute and the Illuminating Engineering Society of North America, a copy of which is maintained by the City Engineer:

Street Type	**Required Spacing**	**Pole Type**	**Lamp Type**	**Height**
Local streets	At intervals of not more than three hundred feet (300')	Wood or Metal	100 watt high pressure sodium	30 feet
Collector arterials	At intervals of not more than three hundred feet (300')	Wood or Metal	100 watt high pressure sodium	30feet

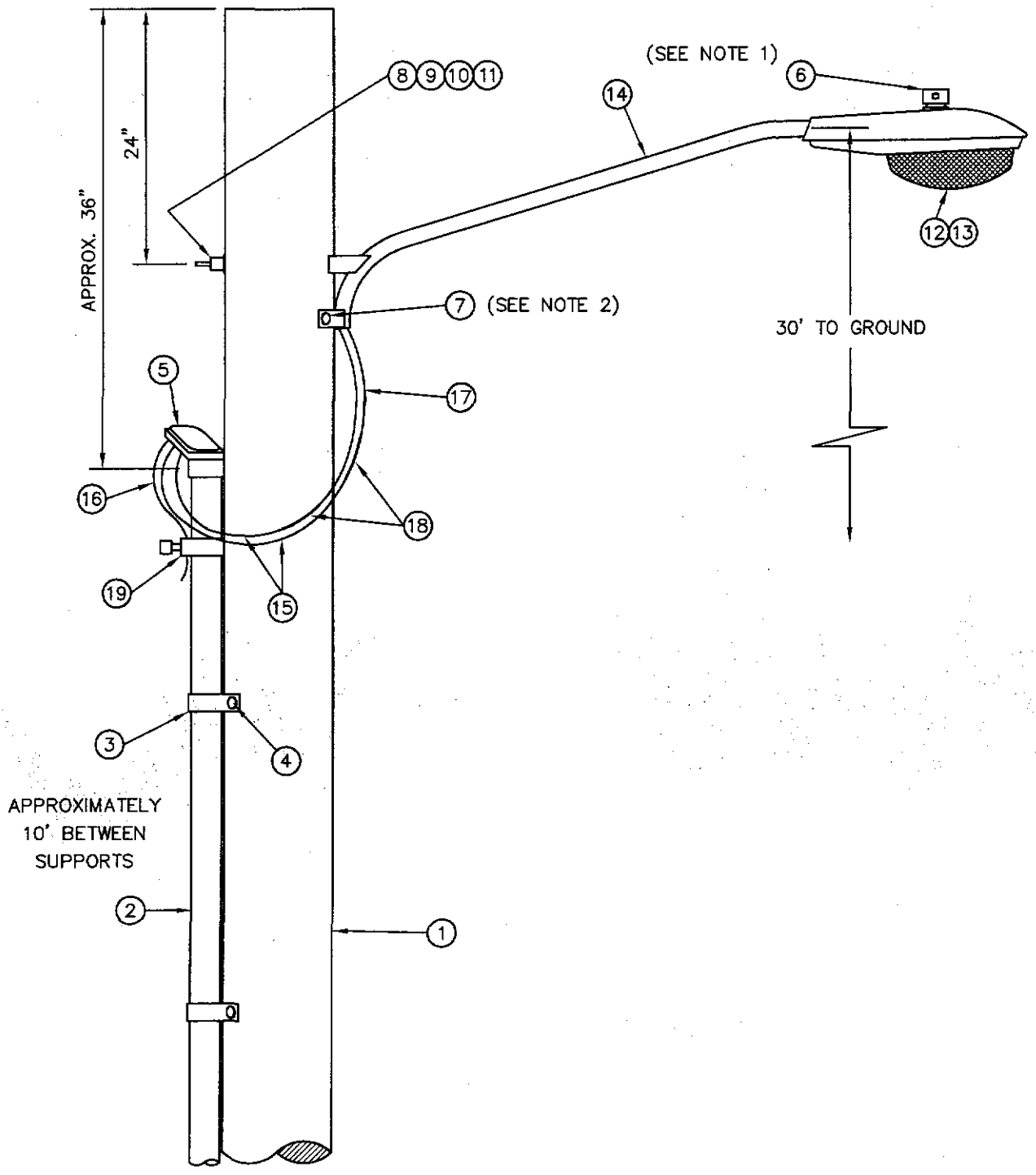

TITLE 19 - SUBDIVISION ORDINANCE

ENGINEERING DEPARTMENT

DESIGN STANDARDS
FOR CONSTRUCTION

RESIDENTIAL
STREET LIGHT WOOD POLE
8-2

Approved By R. A. SHUBERT	Checked By H. M. E.
Date JUNE 03, 2008	Drawn By QEC / J. R.

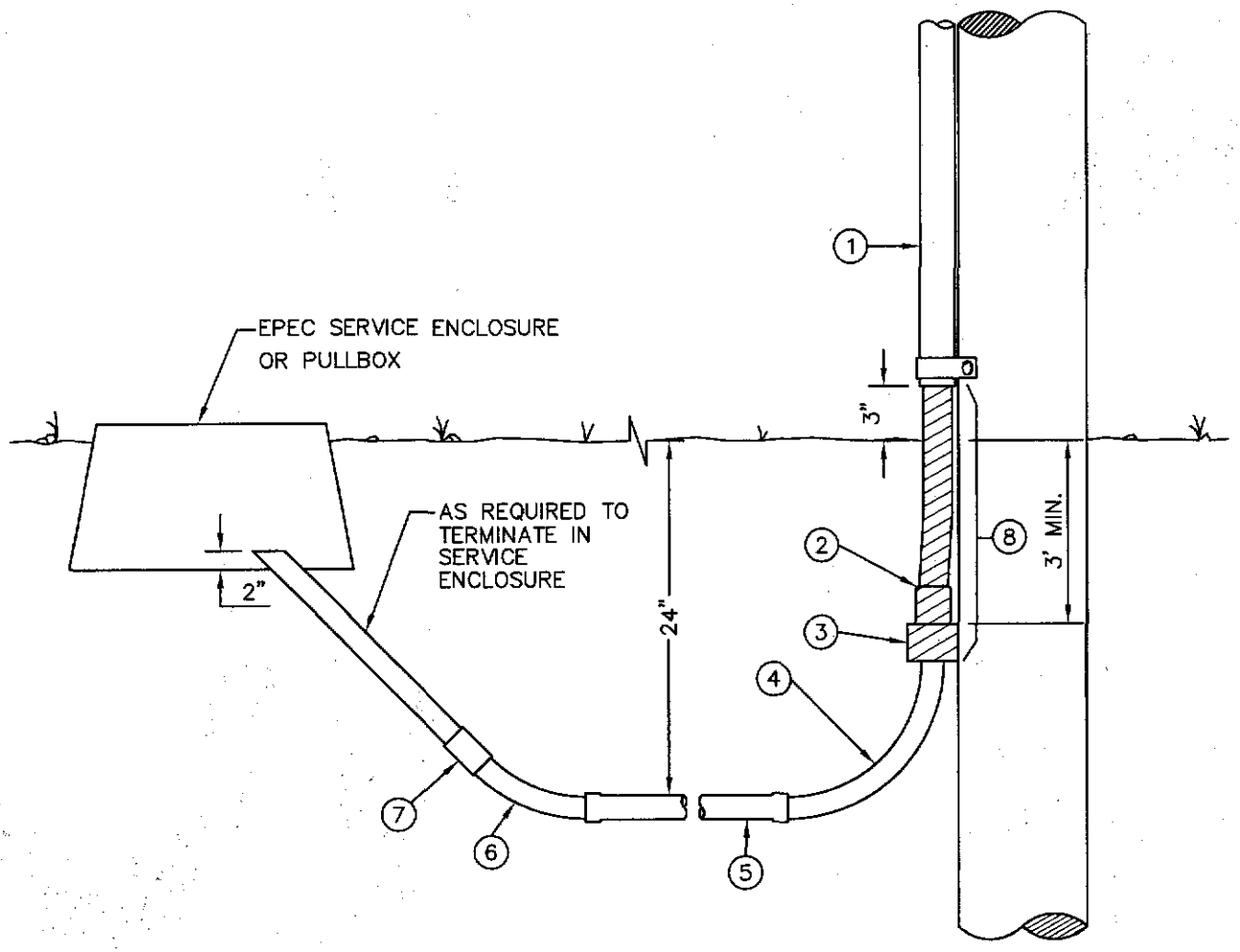

KEY NOTES:

1. 1/2" GALVANIZED RIGID CONDUIT
2. REDUCER 1' TO 1/2" BUSHING
3. 1" PVC FEMALE ADAPTER
4. 1" PVC 90° ELBOW
5. 1" PVC CONDUIT
6. 1" PVC 45° ELBOW
7. 1" PVC COUPLING
8. TAPE 1/2" RIGID CONDUIT (6")

TITLE 19 - SUBDIVISION ORDINANCE

ENGINEERING DEPARTMENT

DESIGN STANDARDS
FOR CONSTRUCTION

RESIDENTIAL
STREET LIGHT WOOD POLE
(connection to service enclosure)
8-3

Approved By R. A. SHUBERT	Checked By H. M. E.
Date JUNE 03, 2008	Drawn By QEC / J. R.

ITEM No.	DESCRIPTION	STOCK No,	QTY.
1	POLE, 35 FT.–CLASS IV	009–035	1
2	GALVANIZED RIGID 1/2" CONDUIT	017–292	3
3	PIPE STRAP FOR 1/2' CONDUIT, 2–HOLE	017–334	7
4	LAG BOLT, 1/4" x 2"	002–330	6
5	WEATHERHEAD, 1/2" CONDUIT	017–293	1
6	PHOTOCELL, 240V–SEE NOTE 1	021–225	1
7	LAG BOLT, 1/2" x 4"	002–370	2
8	MACHINE BOLT, 5/8" x 8"	002–450	1
9	SQUARE GALV. WASHER, 2–1/4"x2"–1/4"	002–760	1
10	COIL–SPRING WASHER, 5/8"	002–786	1
11	LOCKNUT, 5/8"	002–705	1
12	LUMINAIRE, 100W H. P. S.	021–335	1
13	HPS LAMP, 100W	021–085	1
14	MAST ARM, 6' x 1–1/4"	021–200	1
15	COPPER CABLE, #12, 19 STRAND, 600 V	013–665	
16	COPPER CABLE, #12, SOLID, 600 V, GREEN	013–701	
17	CABLE, #10, 2 CONDUCTOR, 600 V, UF	013–600	8
18	SLEEVES, #12–10	005–140	2
19	GROUNDING CLAMP	021–215	1

KEYNOTES

1. MOUNT SO THAT CONTROL FACES NORTH.
2. ITEM 17 SHALL NOT BE SPLICED INSIDE ITEM 14.

DESIGN NOTES

1. INSTALLATION SHALL COMPLY WITH ALL LOCAL CODE REQUIREMENTS.
2. FOR ANY CLARIFICATION, EXCEPTIONS RO QUESTIONS REGARDING CODE INTERPRETATION, CALL EL PASO ELECTRIC CO. DISTRIBUTION DEVELOPMENT DEPARTMENT.

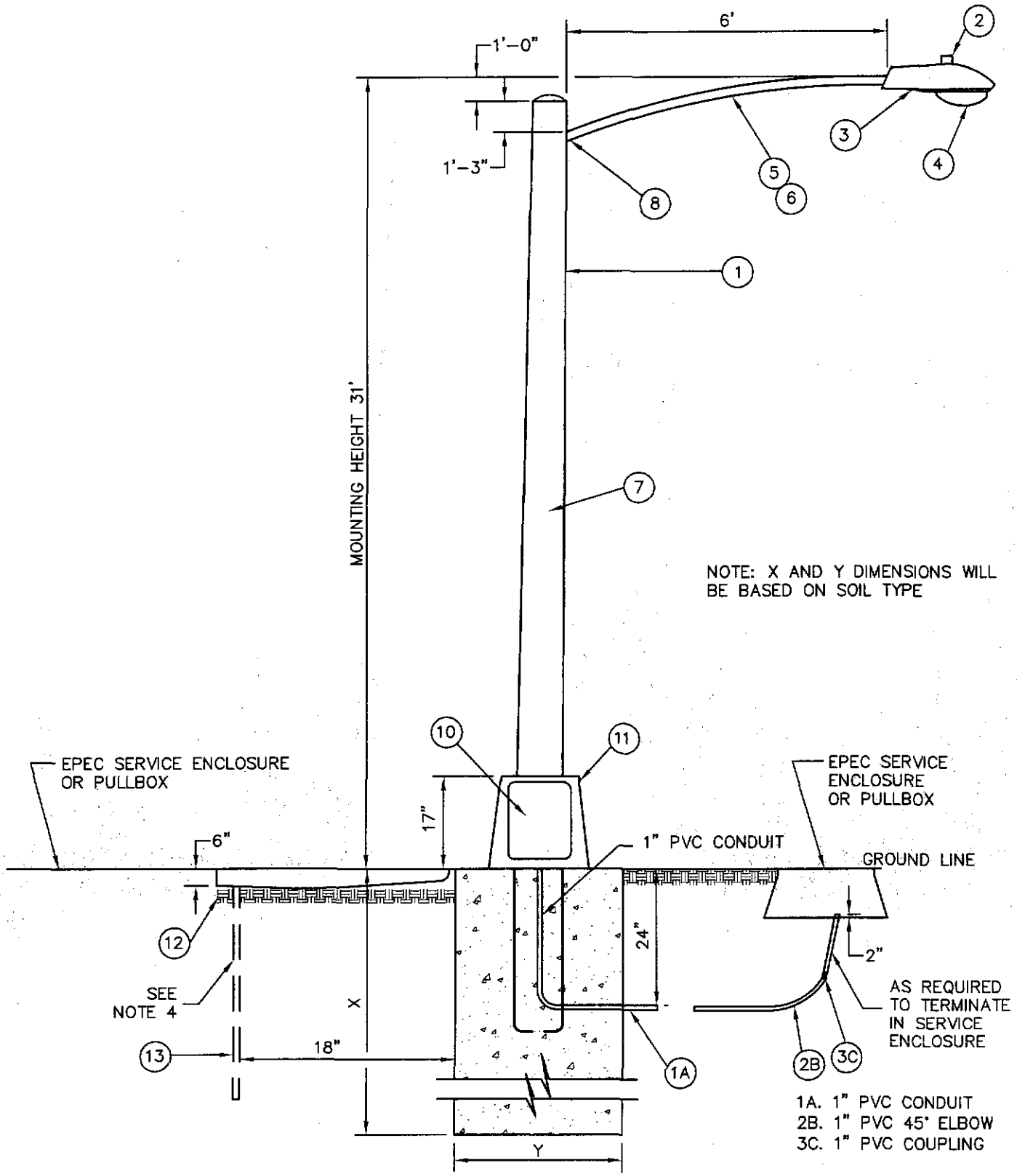

TITLE 19 - SUBDIVISION ORDINANCE

ENGINEERING DEPARTMENT

DESIGN STANDARDS FOR CONSTRUCTION

RESIDENTIAL STREET LIGHT STEEL POLE

8-5

Approved By R. A. SHUBERT	Checked By H. M. B.
Date JUNE 03, 2008	Drawn By QEC / J. R.

ITEM No.	DESCRIPTION	STOCK No.	QTY.
1	POLE, 35 FT.–CLASS IV		1
2	PHOTOCELL, 240V–SEE NOTE 1	021–225	1
3	LUMINAIRE, 100W H. P. S.	021–335	1
4	HPS LAMP, 100W	021–085	1
5	MAST ARM, 6' x 1–1/4"	21–200	1
6	#10 SOLID CABLE 600 V	013–600	AS PEQ'D.
7	CABLE, #10, 3 CONDUCTOR, 600 V, UF	013–600	40' PLUS
8	SLEEVES, #12	05–145	AS REQ'D.
9	ROADWAY LUMINAIRE HPS 150 WATTS	21–340	1
10	BREAK–A–WAY FUSES 30 AMP.	21–250	2
11	ALUMINUM TRANSFORMER BASE	21–608	1
12	5/8' GROUND ROD CLAMP	07–561	1
13	5/8" x 10' CU BONDED GROUND ROD	08–626	1

KEYNOTES

1. MOUNT SO THAT CONTROL FACES NORTH.
2. ITEM 7 SHALL NOT BE SPLICED INSIDE ITEM 5.

DESIGN NOTES

1. INSTALLATION SHALL COMPLY WITH ALL LOCAL CODE REQUIREMENTS.
2. FOR ANY CLARIFICATION, EXCEPTIONS RO QUESTIONS REGARDING CODE INTERPRETATION, CALL EL PASO ELECTRIC CO. DISTRIBUTION DEVELOPMENT DEPARTMENT.
3. A GROUND ROD MUST BE USED,

SECTION 9

SECTION 9

TYPICAL LOT LAYOUT

TITLE	PAGE
TYPICAL LOT LAYOUT	9-1

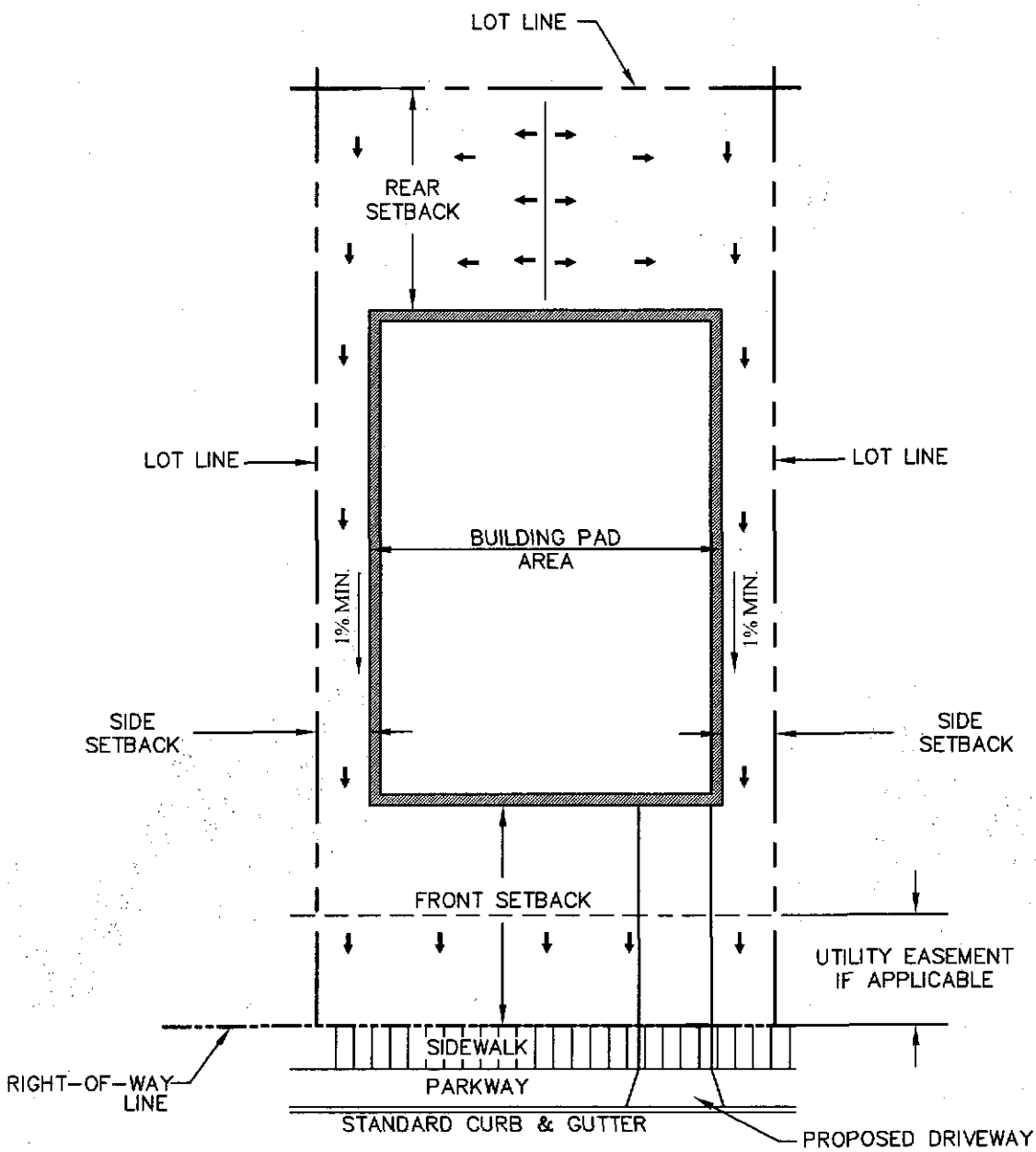

TYPICAL LOT LAYOUT

SCALE: N.T.S.

DRIVEWAY NOTE:

NOTE: DRIVEWAY SLOPES MUST BE 10% MAX. FROM GUTTER FOR FIRST 12 FT. AND 14% MAX. THEREAFTER (BLDG. CD. 18.08.060 C) FOR SETBACK DIMENSIONS REFER TO ZONING ORDINANCE.

TITLE 19 - SUBDIVISION ORDINANCE

ENGINEERING DEPARTMENT

DESIGN STANDARDS FOR CONSTRUCTION

TYPICAL LOT LAYOUT
9-1

Approved By R. A. SHUBERT	Checked By H. M. E.
Date JUNE 03, 2008	Drawn By QEC / J. R.

SECTION 10

SECTION 10

TRAFFIC CALMING STANDARDS

TITLE	PAGE
BULBOUT (INTERSECTION TREATMENT)	10-1
BULBOUT (MIDBLOCK TREATMENT)	10-2
CENTER ISLAND NARROWING	10-3
CHOKER	10-4
DIAGONAL DIVERTER	10-5
FORCED TURN ISLAND	10-6
HALF CLOSURE	10-7
MEDIAN BARRIER	10-8
PEDESTRIAN REFUGE ISLAND	10-9
TRAFFIC CIRCLE	10-10
ROUNDABOUT	10-11
SPEED HUMP	10-12
SPEED TABLE	10-13

Bulbout
(Intersection Treatment)

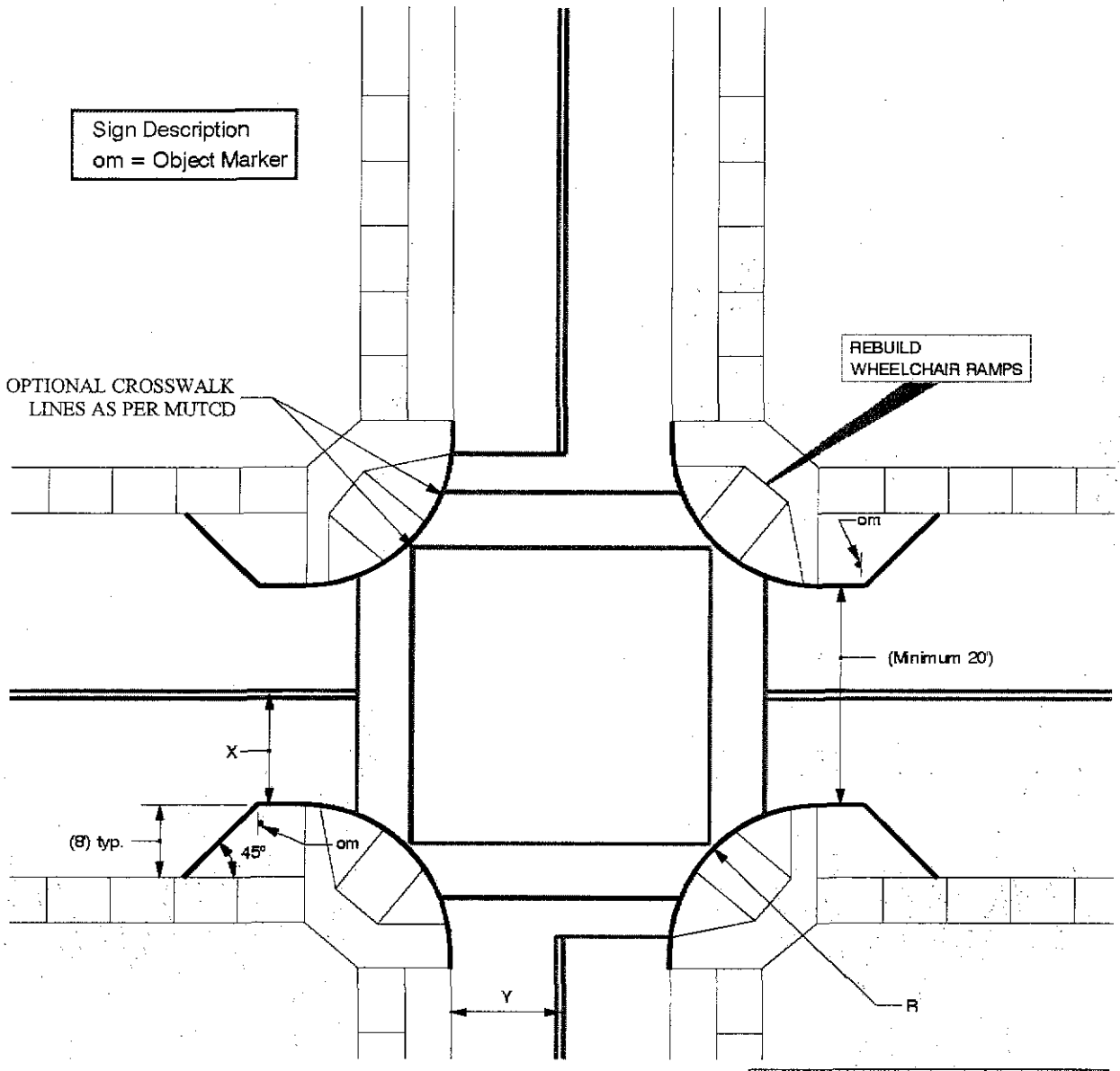

For The Street Widths		Use This Curb Radius
X	Y	R
12'	12'	40'
12'	14'	32'
12'	16'	26'
14'	12'	37'
14'	14'	35'
14'	16'	24'

NOTES:

1. Distance X is referenced from the center of the roadway to the lip of gutter.

TITLE 19 - SUBDIVISION ORDINANCE

ENGINEERING DEPARTMENT

DESIGN STANDARDS FOR CONSTRUCTION

BULBOUT
(INTERSECTION TREATMENT)
10-1

Approved By R. A. SHUBERT
Date JUNE 03, 2008

Checked By H. M. E.
Drawn By QEC / J. R.

Bulbout
(Midblock Treatment)

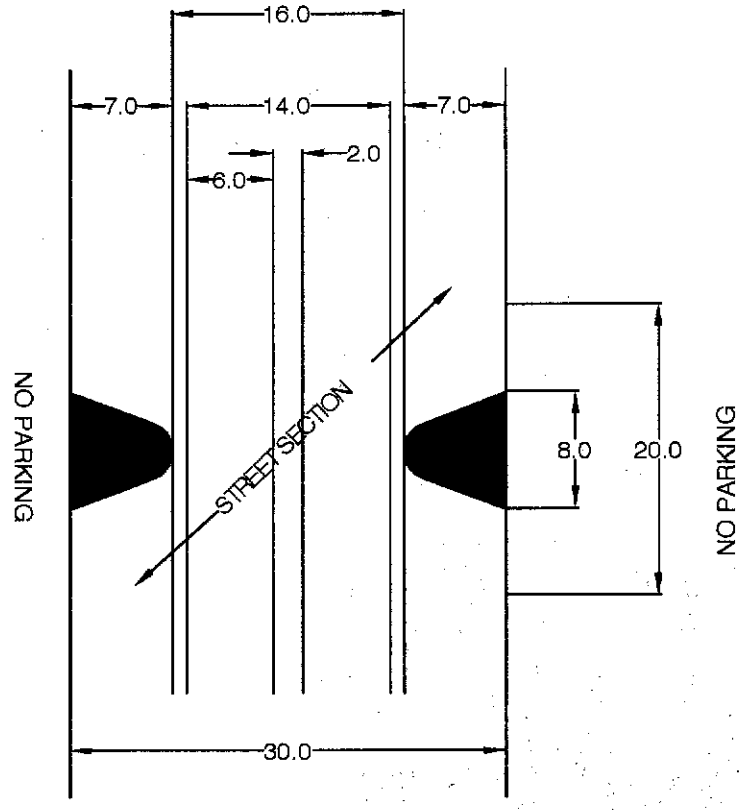

MIN. 30' WIDE STREET
FOR WIDER STREETS
MAKE BULB DEEPER

THE BULB-OUT DRAWING SHOWN IS FOR A 30 FOOT WIDE STREET. IF A STREET IS WIDER, THE BULB WOULD BE DEEPER; EACH BULB SHOWN IS SEVEN FEET DEEP. THE WIDTH BETWEEN BULBS SHOULD BE 16 FEET, WHICH ALLOWS FOR ONE FOOT BETWEEN BULB AND CAR, SIX FEET PER CAR AND TWO FEET BETWEEN CARS. THIS WOULD REQUIRE CARS TO SLOW DOWN SUBSTANTIALLY IN ORDER TO PASS. THE BULB WOULD RESTRICT PARKING FOR APPROXIMATELY 20 FEET (ONE CAR LENGTH FOR PARKING PURPOSES) IN ORDER FOR THE BULB TO BE VISIBLE, ALLOW WIDER VEHICLES TO PULL TO THE RIGHT AND ALLOW AN OPPOSING VEHICLE TO PASS. IT MAY BE POSSIBLE TO PLANT A TREE IN EACH BULB.

Center Island Narrowing

Sign Description	
R4-7	Keep Right

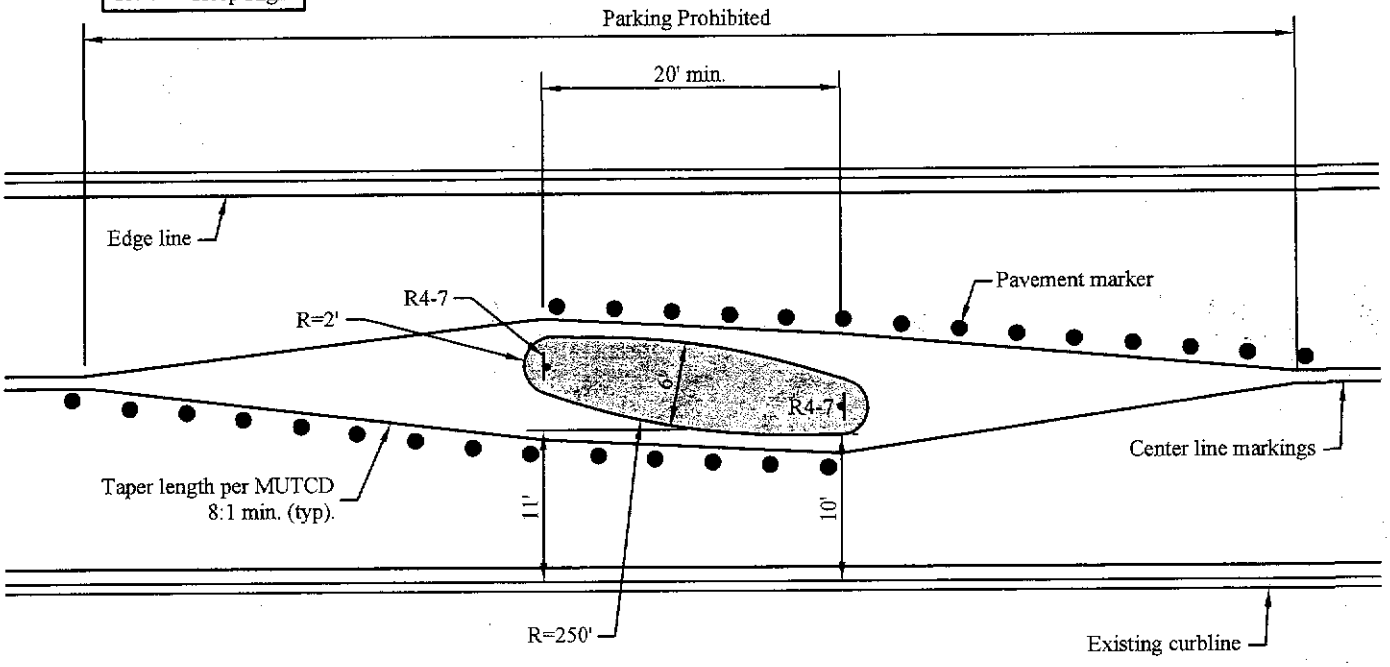

Chicane

Sign Description	
om	Object Marker

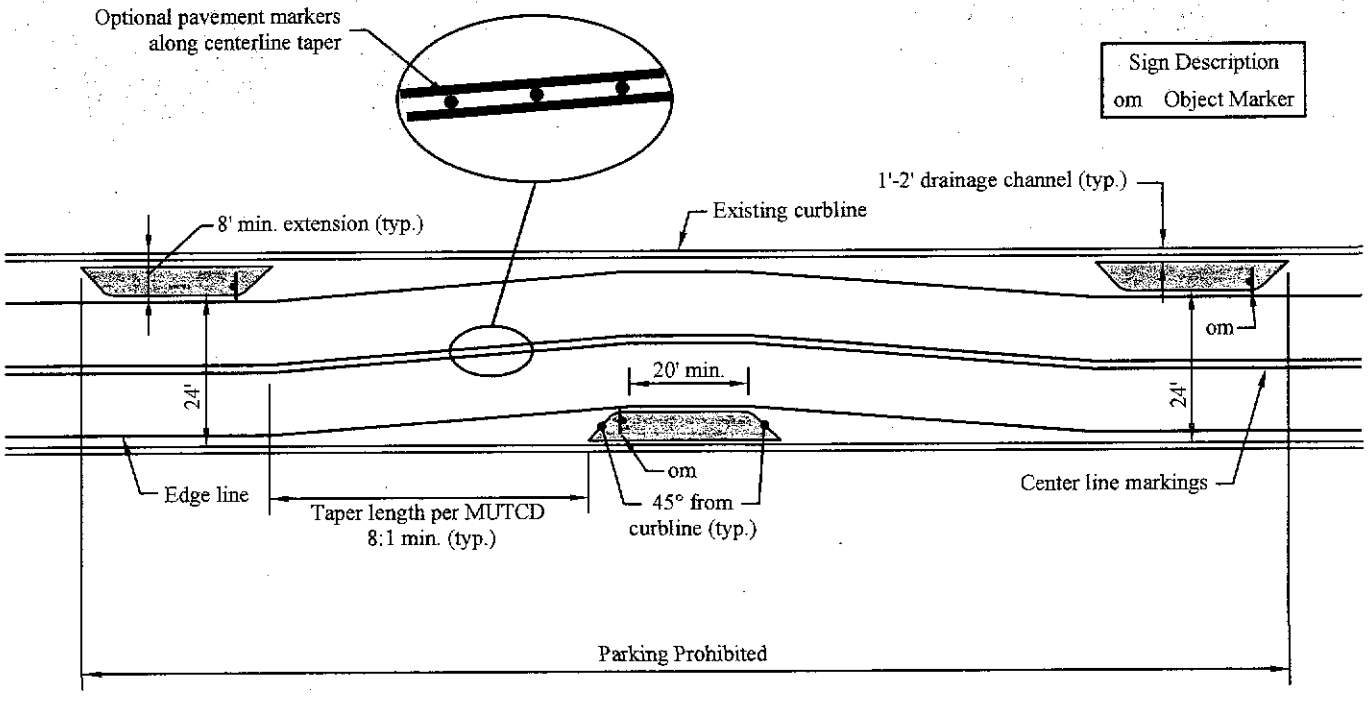

TITLE 19 - SUBDIVISION ORDINANCE

ENGINEERING DEPARTMENT

DESIGN STANDARDS
FOR CONSTRUCTION

CENTER ISLAND
NARROWING AND CHICANE
10-3

Approved By R. A. SHUBERT	Checked By H. M. E.
Date JUNE 03, 2008	Drawn By QEC / J. R.

CHOKER

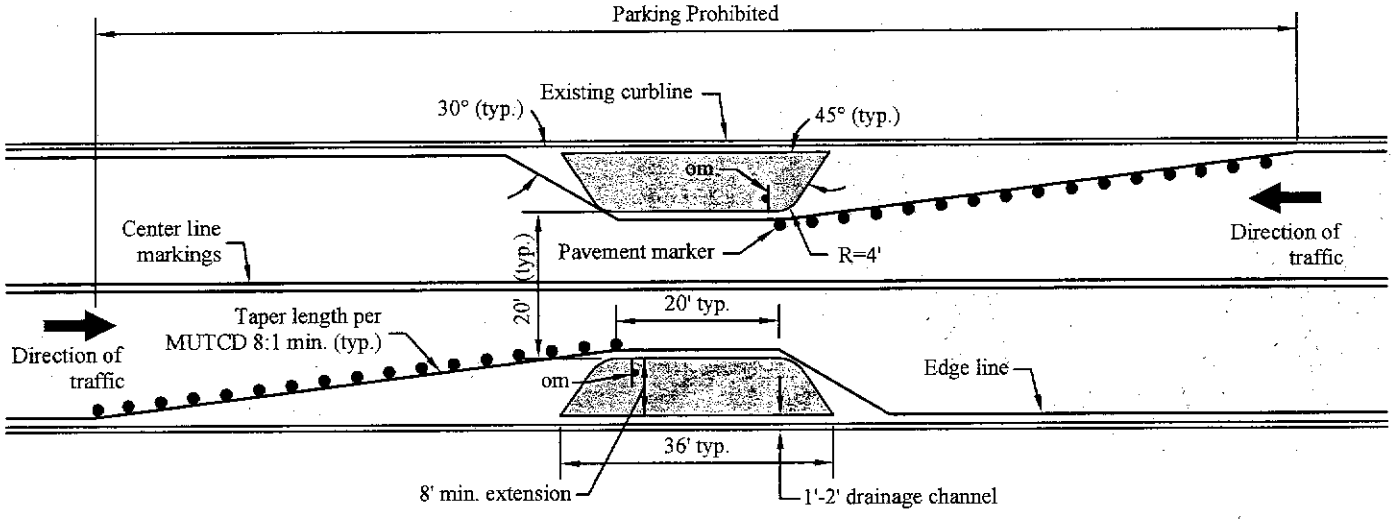

Sign Description
om = Object Marker

TITLE 19 - SUBDIVISION ORDINANCE

ENGINEERING DEPARTMENT

DESIGN STANDARDS FOR CONSTRUCTION

CHOKER

10-4

Approved By R. A. SHUBERT
Date JUNE 03, 2008

Checked By H. M. E.
Drawn By QEC / J. R.

Diagonal Diverter

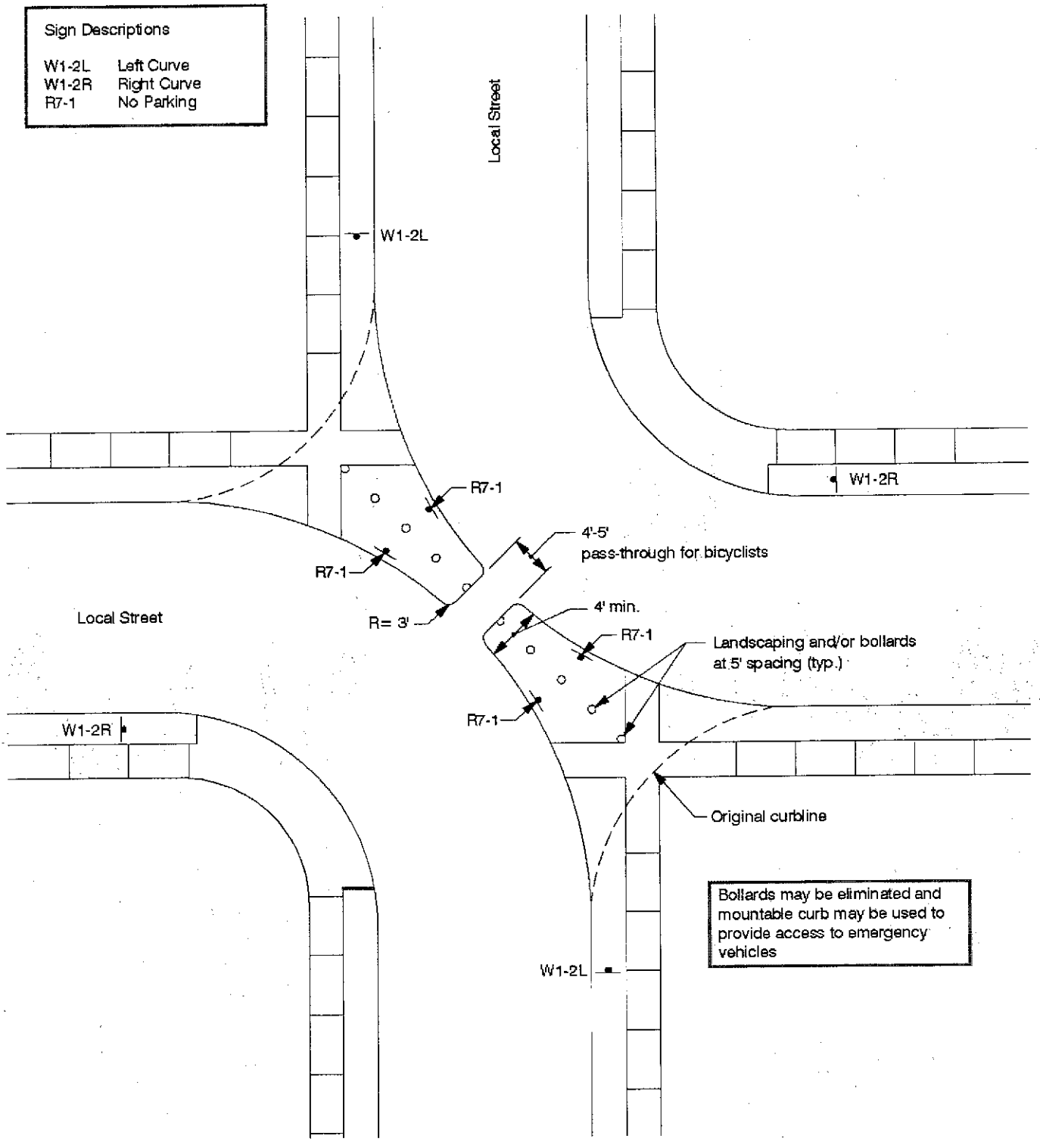

TITLE 19 - SUBDIVISION ORDINANCE

ENGINEERING DEPARTMENT

DESIGN STANDARDS
FOR CONSTRUCTION

DIAGONAL DIVERTER

10-5

Approved By R. A. SHUBERT	Checked By H. M. E.
Date JUNE 03, 2008	Drawn By QEC / J. R.

FORCED TURN ISLAND

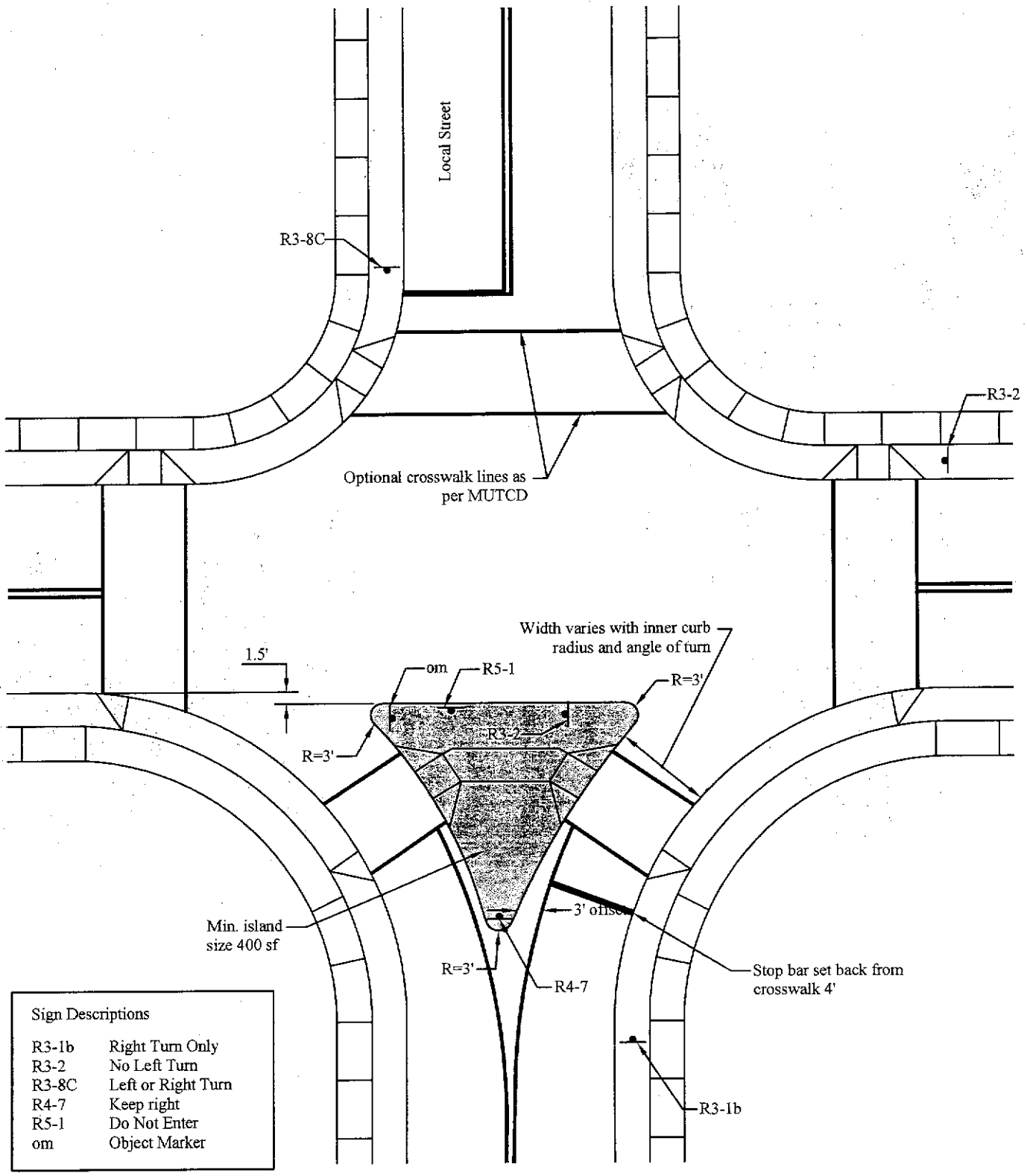

Sign Descriptions	
R3-1b	Right Turn Only
R3-2	No Left Turn
R3-8C	Left or Right Turn
R4-7	Keep right
R5-1	Do Not Enter
om	Object Marker

TITLE 19 - SUBDIVISION ORDINANCE

ENGINEERING DEPARTMENT

DESIGN STANDARDS FOR CONSTRUCTION

FORCED TURN ISLAND
10-6

Approved By R. A. SHUBERT
Date JUNE 03, 2008

Checked By H. M. E.
Drawn By QEC / J. R.

HALF CLOSURE

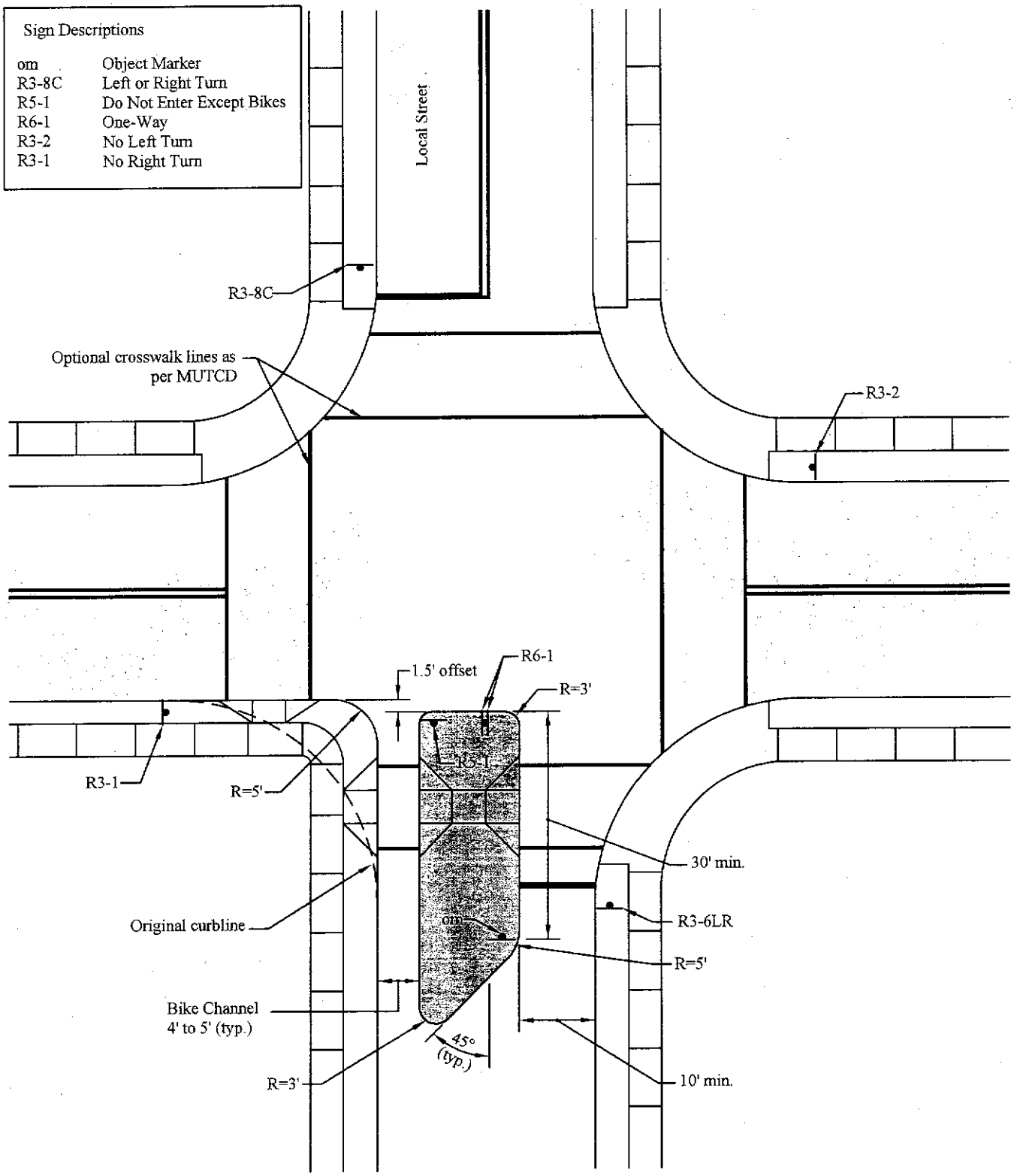

TITLE 19 - SUBDIVISION ORDINANCE

ENGINEERING DEPARTMENT

DESIGN STANDARDS FOR CONSTRUCTION

HALF CLOSURE
10-7

Approved By R. A. SHUBERT	Checked By H. M. E.
Date JUNE 03, 2008	Drawn By QEC / J. R.

Median Barrier

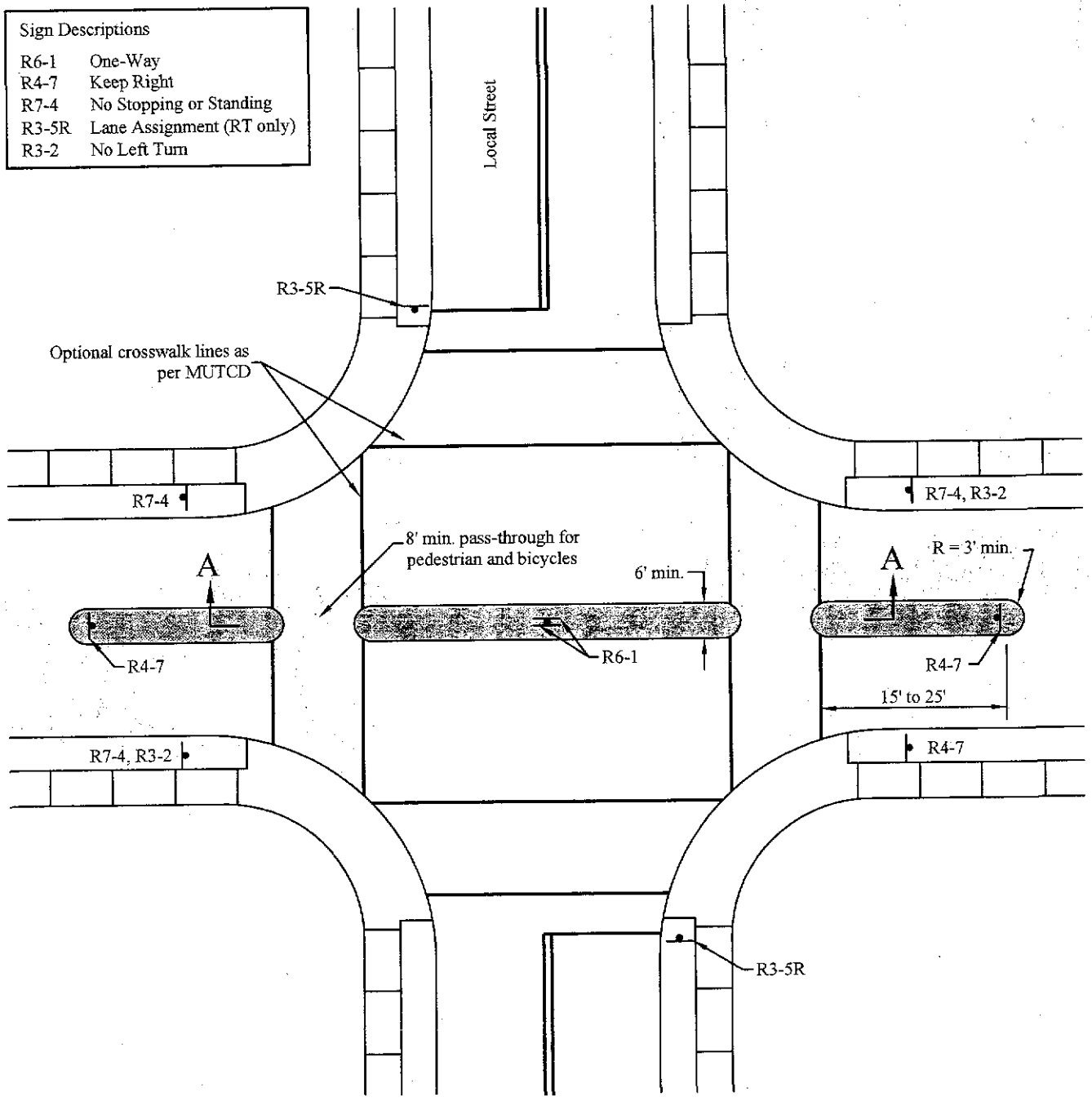

TITLE 19 - SUBDIVISION ORDINANCE

ENGINEERING DEPARTMENT

DESIGN STANDARDS FOR CONSTRUCTION

MEDIAN BARRIER
10-8

Approved By R. A. SHUBERT	Checked By H. M. E.
Date JUNE 03, 2008	Drawn By QEC / J. R.

Pedestrian Refuge Island

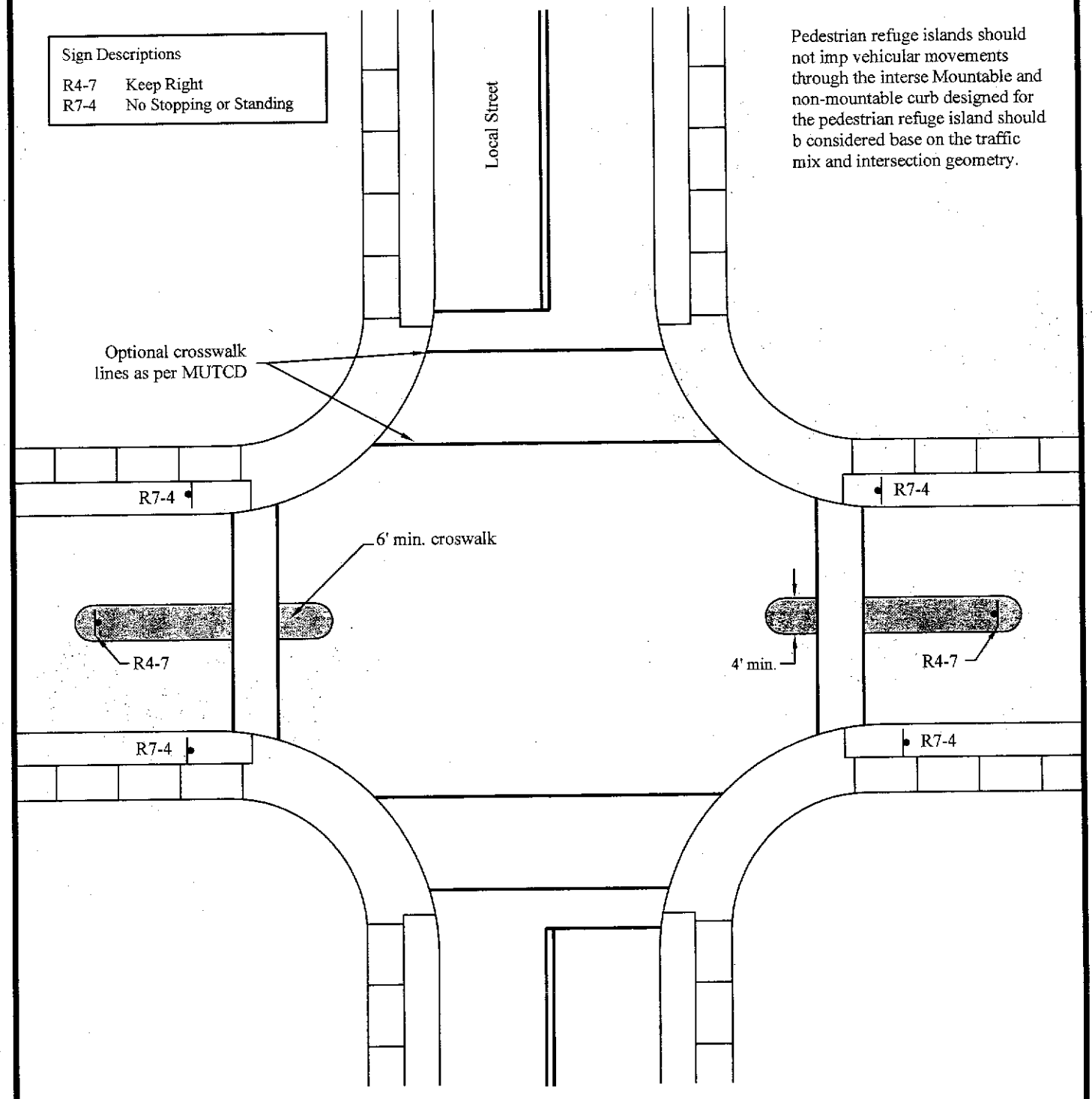

TITLE 19 - SUBDIVISION ORDINANCE

ENGINEERING DEPARTMENT

DESIGN STANDARDS FOR CONSTRUCTION

PEDESTRIAN REFUGE ISLAND
10-9

Approved By R. A. SHUBERT	Checked By H. M. E.
Date JUNE 03, 2008	Drawn By QEC / J. R.

Traffic Circle

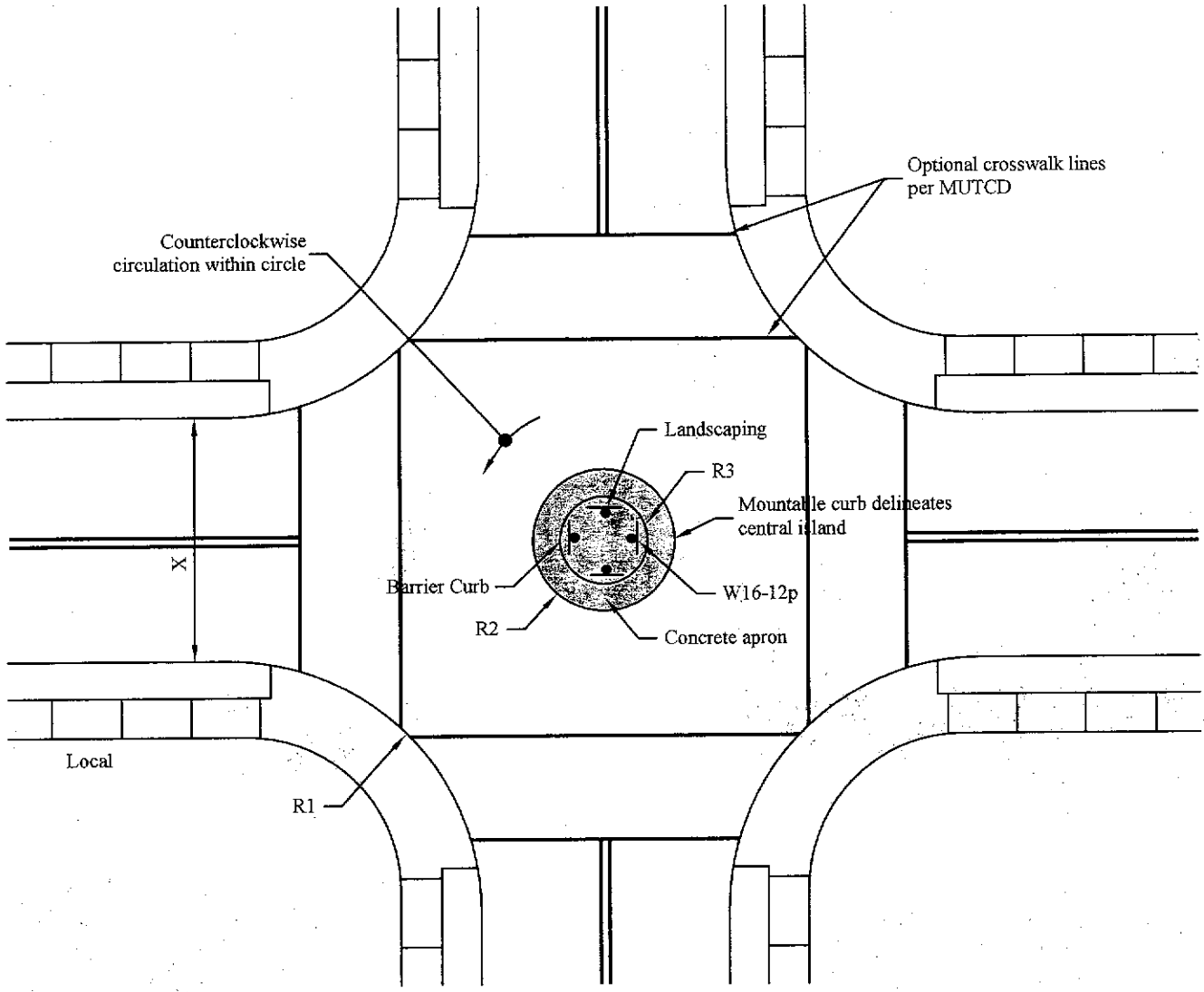

Sign Descriptions	
W16-12p	Traffic Circle

NOTE:

1. Assumes equal street widths; For unequal street widths, use Autoturn to ensure adequate turning radii for the desired design vehicle.

For The Street Width	Use This Curb Radius		
X	R1	R2	R3
34'	20'	20'	8'
	25'	24'	8'
32'	15'	12'	7'
	20'	18'	7'
	25'	20'	7'
30'	15'	11'	6'
	20'	15'	6'
	25'	16'	6'

TITLE 19 - SUBDIVISION ORDINANCE

ENGINEERING DEPARTMENT

DESIGN STANDARDS FOR CONSTRUCTION

TRAFFIC CIRCLE
10-10

Approved By R. A. SHUBERT
Date JUNE 03, 2008
Checked By H. M. E.
Drawn By QEC / J. R.

ROUNDABOUT

This figure illustrates the minimum roundabout configuration for a 90 degree intersection of two roadways with one lane in each direction. It is designed to accommodate a WB-15 design vehicle, or automobile traffic at a 25 mph speed. This is only an example and not a recommended design. Each intersection requires thorough analysis and a unique design by a roundabout designer.

Sign Descriptions	
R1-2	Yield
W11.2	Pedestrian
W16-7pL	Arrow
R4-7	Keep Right
R6-1R	One-Way

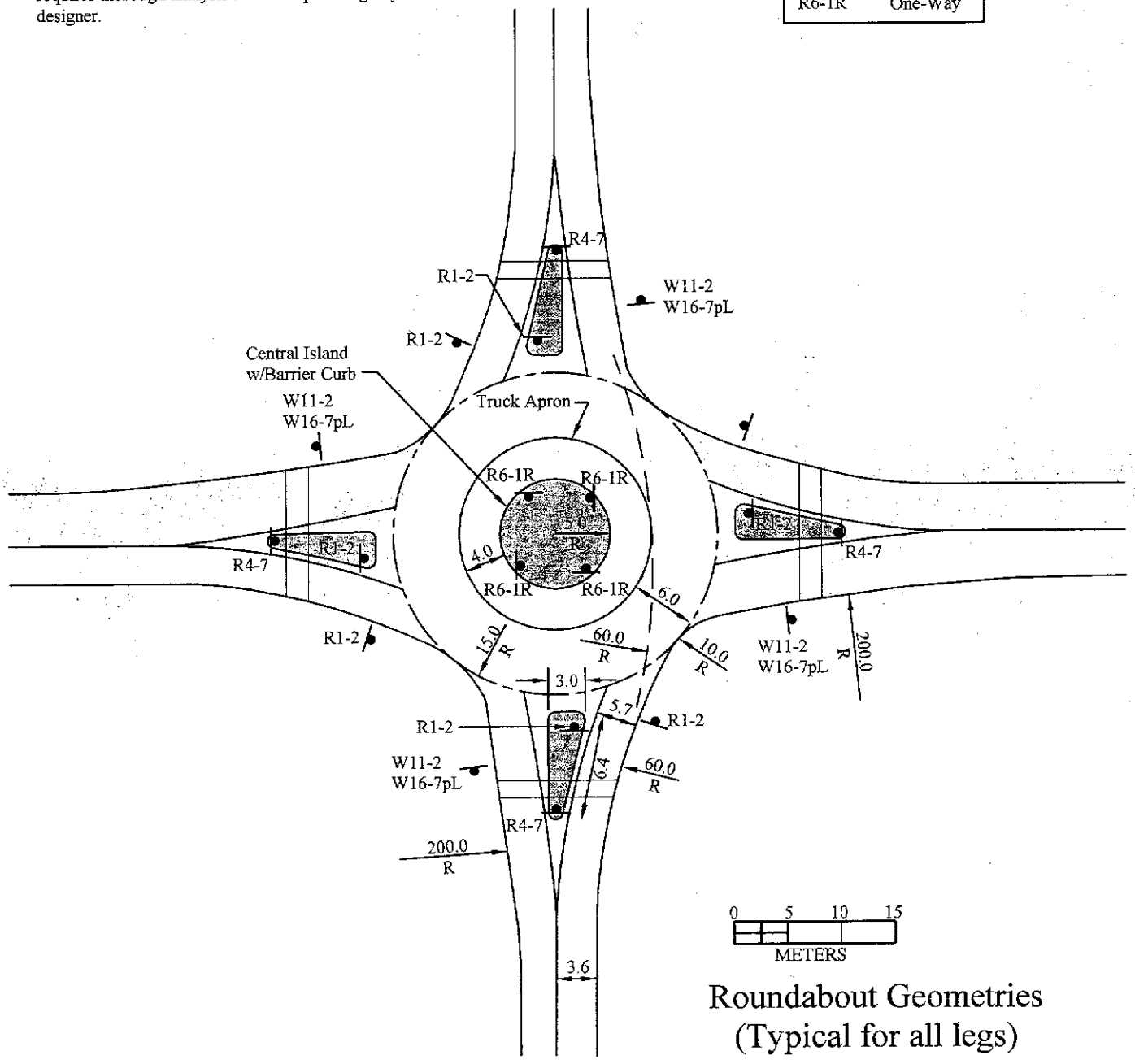

Roundabout Geometries (Typical for all legs)

TITLE 19 - SUBDIVISION ORDINANCE

ENGINEERING DEPARTMENT

DESIGN STANDARDS FOR CONSTRUCTION

ROUNDABOUT
10-11

Approved By R. A. SHUBERT	Checked By H. M. E.
Date JUNE 03, 2008	Drawn By QEC / J. R.

Speed Hump

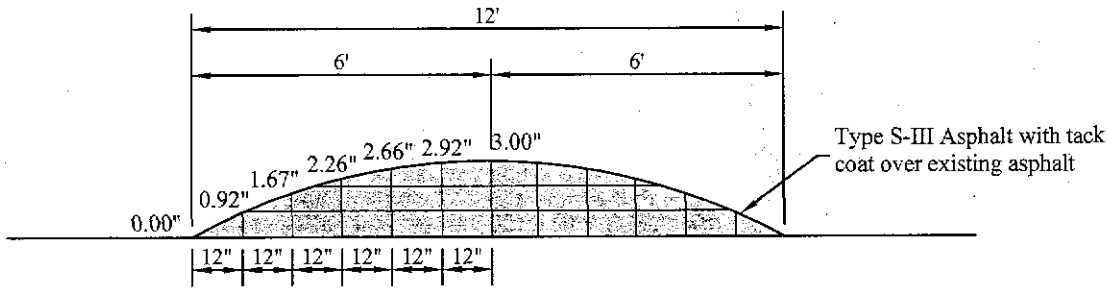

Driving Profile

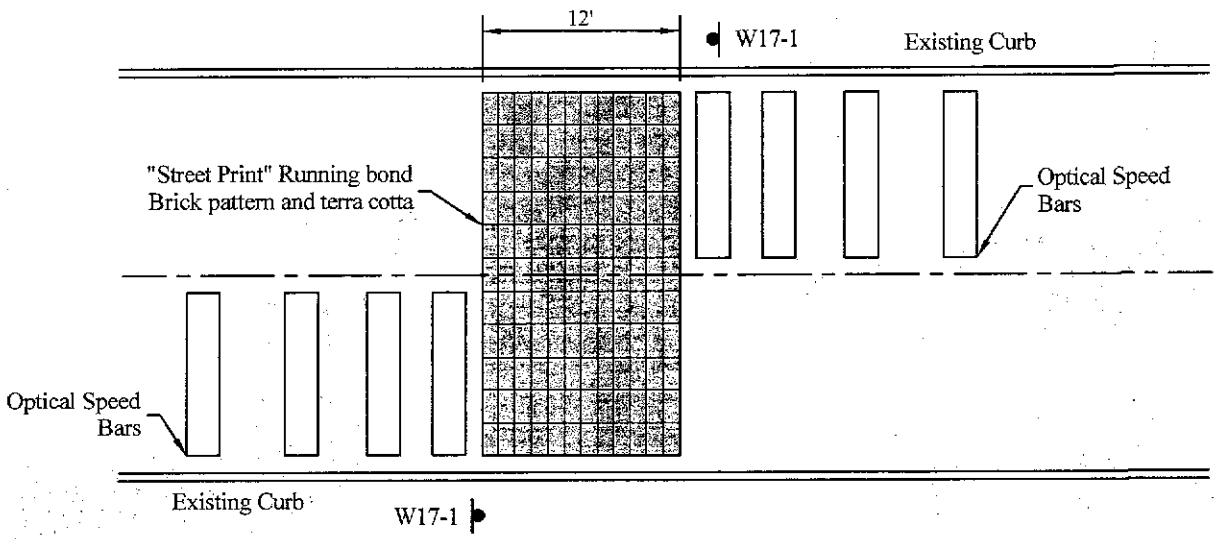

Plan View

Note: Undisturbed clearance for drainage shall be 12" unless otherwise noted in construction documents

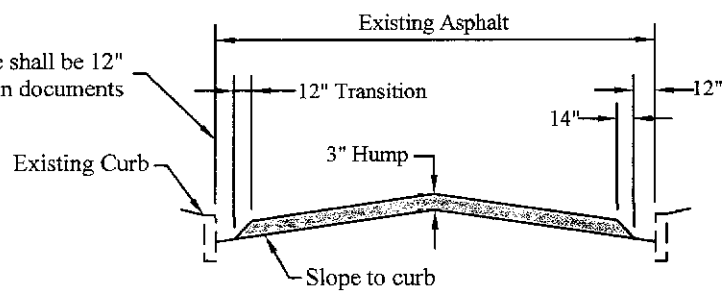

Sign Descriptions	
W17-1	Speed Hump

Typical Section

TITLE 19 - SUBDIVISION ORDINANCE

ENGINEERING DEPARTMENT

DESIGN STANDARDS FOR CONSTRUCTION

SPEED HUMP
10-12

Approved By R. A. SHUBERT	Checked By H. M. E.
Date JUNE 03, 2008	Drawn By QEC / J. R.

Speed Table

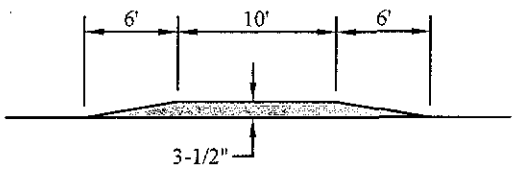

Driving Profile

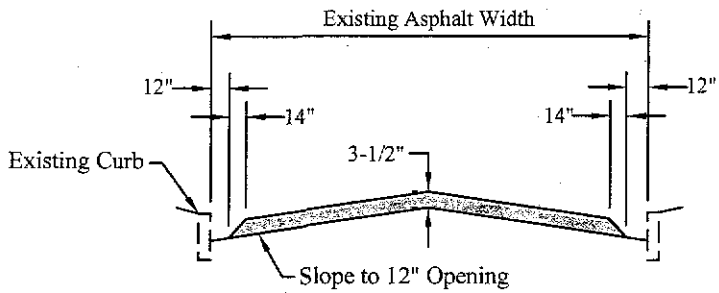

Typical Section

The speed table is made with "Street Print", asphalt that is stamped and colored for a brick appearance

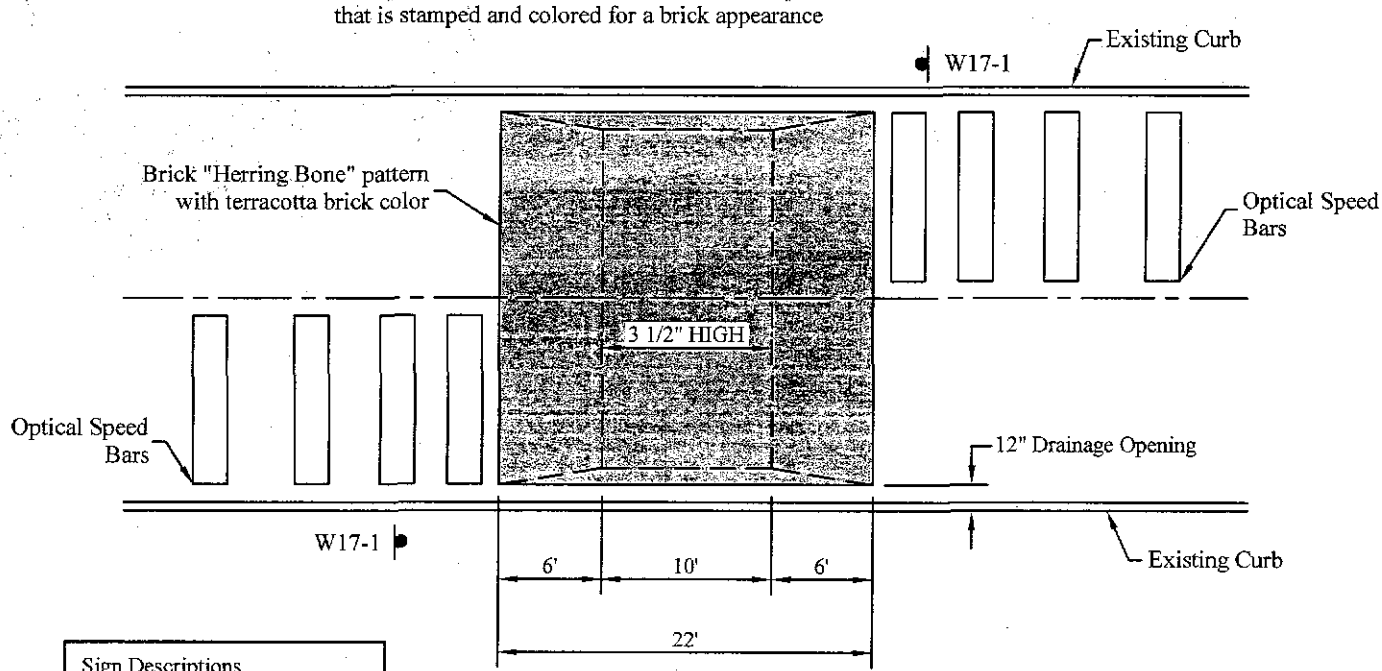

Sign Descriptions	
W17-1	Speed Hump

Plan View

TITLE 19 - SUBDIVISION ORDINANCE

ENGINEERING DEPARTMENT

DESIGN STANDARDS FOR CONSTRUCTION

SPEED TABLE
10-13

Approved By R. A. SHUBERT	Checked By H. M. E.
Date JUNE 03, 2008	Drawn By QEC / J. R.